For Office Use Only:

File Number	ANPL2023245	Application Fee	$4,952.00
Related File Number		Conservation Authority Fee	$514.15
Pre-consultation Meeting		Well & Septic Info Provided	N/A
Application Submitted	July 13, 2023	Planner	Hanne Yager
Complete Application	July 31, 2023	Public Notice Sign	

Check the type of planning application(s) you are submitting.

- ☐ Consent/Severance/Boundary Adjustment
- ☐ Surplus Farm Dwelling Severance and Zoning By-law Amendment
- ■ Minor Variance
- ☐ Easement/Right-of-Way

Property Assessment Roll Number: 3310-493-110-37200

A. Applicant Information

Name of Owner Tom Land

It is the responsibility of the owner or applicant to notify the planner of any changes in ownership within 30 days of such a change.

Address 197 Cedar Drive

Town and Postal Code Turkey Point N0E 1T0

Phone Number

Cell Number 519-410-3339

Email tommyland8@gmail.com

Name of Applicant agent

Address

Town and Postal Code

Phone Number

Cell Number

Email

Name of Agent	David McPherson
Address	8 Culver Lane
Town and Postal Code	Simcoe N3Y 5C8
Phone Number	519-426-7295
Cell Number	519-427-6483
Email	david-a-mcpherson@hotmail.com

Please specify to whom all communications should be sent. Unless otherwise directed, all correspondence and notices in respect of this application will be forwarded to the owner and agent noted above.

☐ Owner ■ Agent ☐ Applicant

Names and addresses of any holder of any mortgagees, charges or other encumbrances on the subject lands:

B. Location, Legal Description and Property Information

1. Legal Description (include Geographic Township, Concession Number, Lot Number, Block Number and Urban Area or Hamlet):

   Lot 3 Plan 226

   Charlotteville

   Municipal Civic Address: 9 Snooks Drive, Turkey Point

   Present Official Plan Designation(s): Resort Residential

   Present Zoning: Resort Residential

2. Is there a special provision or site specific zone on the subject lands?

   ☐ Yes ■ No If yes, please specify:

3. Present use of the subject lands:

   cottage

4. Please describe **all existing** buildings or structures on the subject lands and whether they are to be retained, demolished or removed. If retaining the buildings or structures, please describe the type of buildings or structures, and illustrate the setback, in metric units, from front, rear and side lot lines, ground floor area, gross floor area, lot coverage, number of storeys, width, length, and height on your attached sketch which must be included with your application:

   existing cottage of 420 sq.ft.

5. If an addition to an existing building is being proposed, please explain what it will be used for (for example a bedroom, kitchen, or bathroom). If new fixtures are proposed, please describe.

   n/a

6. Please describe **all proposed** buildings or structures/additions on the subject lands. Describe the type of buildings or structures/additions, and illustrate the setback, in metric units, from front, rear and side lot lines, ground floor area, gross floor area, lot coverage, number of storeys, width, length, and height on your attached sketch which must be included with your application:

   no change to existing building

7. Are any existing buildings on the subject lands designated under the *Ontario Heritage Act* as being architecturally and/or historically significant? Yes ☐ No ■

   If yes, identify and provide details of the building:

8. If known, the length of time the existing uses have continued on the subject lands:

   50 years

9. Existing use of abutting properties:

   cottages

10. Are there any easements or restrictive covenants affecting the subject lands?

    ☐ Yes ■ No If yes, describe the easement or restrictive covenant and its effect:

C. Purpose of Development Application

Note: Please complete all that apply. **Failure to complete this section will result in an incomplete application.**

1. Site Information (Please refer to Zoning By-law to confirm permitted dimensions)

	Existing	Permitted	Provision	Proposed	Deficiency
Lot frontage	0	15m	5.8.2 b)i)	0	15m
Lot depth					
Lot width					
Lot area					
Lot coverage					
Front yard					
Rear yard					
Height					
Left Interior side yard					
Right Interior side yard					
Exterior side yard (corner lot)					
Parking Spaces (number)					
Aisle width					
Stall size					
Loading Spaces					
Other			3.11.1		no frontage on an improved street

2. Please explain why it is not possible to comply with the provision(s) of the Zoning By-law:

Lot with cottage has existed for over 50 years on a landlocked parcel with no frontage on an improved street. Access to lot is by way of a 10 foot right of way shown on deeds.

3. **Consent/Severance/Boundary Adjustment**: Description of land intended to be severed in metric units:

Frontage: _____

Depth: _____

Width: _____

Lot Area: _____

Present Use: _____

Proposed Use: _____

Proposed final lot size (if boundary adjustment): _____

If a boundary adjustment, identify the assessment roll number and property owner of the lands to which the parcel will be added: _____

Description of land intended to be retained in metric units:

Frontage: _____

Depth: _____

Width: _____

Lot Area: _____

Present Use: _____

Proposed Use: _____

Buildings on retained land: _____

4. **Easement/Right-of-Way:** Description of proposed right-of-way/easement in metric units:

Frontage: existing 10 foot right of way

Depth: _____

Width: ______________________

Area: ______________________

Proposed Use: ______________________

5. **Surplus Farm Dwelling Severances Only:** List all properties in Norfolk County, which are owned and farmed by the applicant and involved in the farm operation

Owners Name: ______________________

Roll Number: ______________________

Total Acreage: ______________________

Workable Acreage: ______________________

Existing Farm Type: (for example: corn, orchard, livestock) ______________________

Dwelling Present?: ☐ Yes ☐ No If yes, year dwelling built ______________________

Date of Land Purchase: ______________________

Owners Name: ______________________

Roll Number: ______________________

Total Acreage: ______________________

Workable Acreage: ______________________

Existing Farm Type: (for example: corn, orchard, livestock) ______________________

Dwelling Present?: ☐ Yes ☐ No If yes, year dwelling built ______________________

Date of Land Purchase: ______________________

Owners Name: ______________________

Roll Number: ______________________

Total Acreage: ______________________

Workable Acreage: ______________________

Existing Farm Type: (for example: corn, orchard, livestock) ______________________

Dwelling Present?: ☐ Yes ☐ No If yes, year dwelling built ______________________

Date of Land Purchase: ______________________

Owners Name: _____

Roll Number: _____

Total Acreage: _____

Workable Acreage: _____

Existing Farm Type: (for example: corn, orchard, livestock) _____

Dwelling Present?: ☐ Yes ☐ No If yes, year dwelling built _____

Date of Land Purchase: _____

Owners Name: _____

Roll Number: _____

Total Acreage: _____

Workable Acreage: _____

Existing Farm Type: (for example: corn, orchard, livestock) _____

Dwelling Present?: ☐ Yes ☐ No If yes, year dwelling built _____

Date of Land Purchase: _____

Note: If additional space is needed please attach a separate sheet.

D. All Applications: Previous Use of the Property

1. Has there been an industrial or commercial use on the subject lands or adjacent lands? ☐ Yes ■ No ☐ Unknown
   If yes, specify the uses (for example: gas station, or petroleum storage):
   _____
   _____
   _____

2. Is there reason to believe the subject lands may have been contaminated by former uses on the site or adjacent sites? ☐ Yes ■ No ☐ Unknown

3. Provide the information you used to determine the answers to the above questions:
   owner provided
   _____
   _____

4. If you answered yes to any of the above questions in Section D, a previous use inventory showing all known former uses of the subject lands, or if appropriate, the adjacent lands, is needed. Is the previous use inventory attached? ☐ Yes ☐ No

E. All Applications: Provincial Policy

1. Is the requested amendment consistent with the provincial policy statements issued under subsection 3(1) of the *Planning Act, R.S.O. 1990, c. P. 13*? ■ Yes ☐ No

   If no, please explain:

   _____

   _____

2. It is owner's responsibility to be aware of and comply with all relevant federal or provincial legislation, municipal by-laws or other agency approvals, including the Endangered Species Act, 2007. Have the subject lands been screened to ensure that development or site alteration will not have any impact on the habitat for endangered or threatened species further to the provincial policy statement subsection 2.1.7? ■ Yes ☐ No

   If no, please explain:

   _____

   _____

3. Have the subject lands been screened to ensure that development or site alteration will not have any impact on source water protection? ☐ Yes ■ No

   If no, please explain:

   not within a WHPA

   _____

   Note: If in an area of source water Wellhead Protection Area (WHPA) A, B or C please attach relevant information and approved mitigation measures from the Risk Manager Official.

4. All Applications: Are any of the following uses or features on the subject lands or within 500 metres of the subject lands, unless otherwise specified? Please check boxes, if applicable.

Livestock facility or stockyard (submit MDS Calculation with application)

☐ On the subject lands or ☐ within 500 meters – distance _____

Wooded area
☐ On the subject lands or ■ within 500 meters – distance 10m

Municipal Landfill
☐ On the subject lands or ☐ within 500 meters – distance _____

Sewage treatment plant or waste stabilization plant
☐ On the subject lands or ☐ within 500 meters – distance _____

Provincially significant wetland (class 1, 2 or 3) or other environmental feature
☐ On the subject lands or ■ within 500 meters – distance 388m

Floodplain
☐ On the subject lands or ☐ within 500 meters – distance _____

Rehabilitated mine site
☐ On the subject lands or ☐ within 500 meters – distance _____

Non-operating mine site within one kilometre
☐ On the subject lands or ☐ within 500 meters – distance _____

Active mine site within one kilometre
☐ On the subject lands or ☐ within 500 meters – distance _____

Industrial or commercial use (specify the use(s))
☐ On the subject lands or ☐ within 500 meters – distance _____

Active railway line
☐ On the subject lands or ☐ within 500 meters – distance _____

Seasonal wetness of lands
☐ On the subject lands or ☐ within 500 meters – distance _____

Erosion
☐ On the subject lands or ☐ within 500 meters – distance _____

Abandoned gas wells
☐ On the subject lands or ☐ within 500 meters – distance _____

F. All Applications: Servicing and Access

1. Indicate what services are available or proposed:

Water Supply

☐ Municipal piped water ☐ Communal wells
☐ Individual wells ■ Other (describe below)

Turkey Point water system

Sewage Treatment

☐ Municipal sewers ☐ Communal system
■ Septic tank and tile bed in good working order ☐ Other (describe below)

Storm Drainage

☐ Storm sewers ■ Open ditches
☐ Other (describe below)

2. Existing or proposed access to subject lands:

■ Municipal road ☐ Provincial highway
☐ Unopened road ☐ Other (describe below)

Name of road/street:

Snooks Drive

G. All Applications: Other Information

1. Does the application involve a local business? ☐ Yes ■ No

If yes, how many people are employed on the subject lands?

2. Is there any other information that you think may be useful in the review of this application? If so, explain below or attach on a separate page.

see attached premise and justification report

H. Supporting Material to be submitted by Applicant

In order for your application to be considered complete, folded hard copies (number of paper copies as directed by the planner) and an **electronic version (PDF) of the site plan drawings, additional plans, studies and reports** will be required, including but not limited to the following details:

1. Concept/Layout Plan
2. All measurements in metric
3. Existing and proposed easements and right of ways
4. Parking space totals – required and proposed
5. All dimensions of the subject lands
6. Dimensions and setbacks of all buildings and structures
7. Location and setbacks of septic system and well from all existing and proposed lot lines, and all existing and proposed structures
8. Names of adjacent streets
9. Natural features, watercourses and trees

In addition, the following additional plans, studies and reports, including but not limited to, **may** also be required as part of the complete application submission:

☐ On-Site Sewage Disposal System Evaluation Form (to verify location and condition)

☐ Environmental Impact Study

☐ Geotechnical Study / Hydrogeological Review

☐ Minimum Distance Separation Schedule

☐ Record of Site Condition

Your development approval might also be dependent on Ministry of Environment Conservation and Parks, Ministry of Transportation or other relevant federal or provincial legislation, municipal by-laws or other agency approvals.

All final plans must include the owner's signature as well as the engineer's signature and seal.

I. Transfers, Easements and Postponement of Interest

The owner acknowledges and agrees that if required it is their solicitor's responsibility on behalf of the owner for the registration of all transfer(s) of land to the County, and/or transfer(s) of easement in favour of the County and/or utilities. Also, the owner further acknowledges and agrees that it is their solicitor's responsibility on behalf of the owner for the registration of postponements of any charges in favour of the County.

Permission to Enter Subject Lands

Permission is hereby granted to Norfolk County officers, employees or agents, to enter the premises subject to this application for the purposes of making inspections associated with this application, during normal and reasonable working hours.

Freedom of Information

For the purposes of the *Municipal Freedom of Information and Protection of Privacy Act*, I authorize and consent to the use by or the disclosure to any person or public body any information that is collected under the authority of the *Planning Act, R.S.O. 1990, c. P. 13* for the purposes of processing this application.

Owner/Applicant/Agent Signature — Date: 09/14/22

J. Owner's Authorization

If the applicant/agent is not the registered owner of the lands that is the subject of this application, the owner must complete the authorization set out below.

I/We Thomas Land am/are the registered owner(s) of the lands that is the subject of this application.

I/We authorize DAVID McPHERSON to make this application on my/our behalf and to provide any of my/our personal information necessary for the processing of this application. Moreover, this shall be your good and sufficient authorization for so doing.

Owner — Date: 09/14/22

Owner — Date

***Note: If property is owned by an Ontario Ltd. Corporation, Articles of Incorporation are required to be attached to the application.**

K. Declaration

I, David McPherson of Simcoe

solemnly declare that:

all of the above statements and the statements contained in all of the exhibits transmitted herewith are true and I make this solemn declaration conscientiously believing it to be true and knowing that it is of the same force and effect as if made under oath and by virtue of *The Canada Evidence Act*.

Declared before me at:

Simcoe

~~Owner/Applicant~~/Agent Signature

In Norfolk County

This 14th day of October

A.D., 2022

A Commissioner, etc.

OWNER'S AUTHORIZATION

I/we Thomas Land am/are the registered owner(s) of the land that is the subject of this application.

I/we authorize **DAVID MCPHERSON** to make this application on my/our behalf and to act on my/our behalf as my/our authorized agent during the processing of this application.

Moreover, this shall be your good and sufficient authorization for so doing.

OWNER 09/14/22
DATE

OWNER DATE

IN THE MATTER OF 9 SNOOKS DRIVE, TURKEY POINT, ONTARIO

AFFIDAVIT OF KAREN LYNN BENNETT

I, Karen Lynn Bennett, of Norfolk County, in the Province of Ontario, make oath and say/affirm:

1. I am an owner of 7 Snooks Drive, Turkey Point, Ontario, together with my spouse, Robert Rene Bennett. This property is adjoining 9 Snooks Drive, Turkey Point, Ontario (the "Subject Property"). I was born on October 9, 1953.
2. I am a daughter of the late John William Bedell and Violet Fern Bedell. Violet's father and my maternal grandfather, William Francis Partridge was the original owner of the property and he built the cottage that was on the Subject Property in 1956. My aunt and uncle, Peter and Vera Partridge VanBuren purchased the Subject Property from my grandfather. In the early 1970s, my parents, John and Violet, purchased the property from Peter and Vera.
3. Following John Bedell's passing, ownership of the Subject Property was transferred to my mother, Violet Bedell, solely, on November 21st, 2012. On November 24th, 2020, the Subject Property was transferred into my name, along with my sisters, Debra Joan DeFields and Carolyn Jane Bedell after my mother passed away. We owned the Subject Property until June 4, 2021, when we sold the Subject Property and transferred title to Thomas Land.
4. As a direct descendant or niece of the only owners of the Subject Property since it was built, and then as an owner of the Subject Property from November 24, 2020 to June 4, 2021, I have direct, first-hand knowledge of the history of the use of the Subject Property since 1956.
5. My grandparents used the Subject Property as soon as it was built as a seasonal cottage. It was used for that purpose on a continuous basis by either them, or members of our family, each year from 1956 up until 2020. In 2021, while we did use

it as a cottage briefly in that year, it was only for a short time before we transferred interest to Thomas Land.

6. I can confirm that there was never any interruption in use of the Subject Property as a seasonal cottage from 1956 to 2020, nor was it ever abandoned.

7. I make this Affidavit for informational purposes in Thomas Land's Application for a Minor Variance and for no other improper purpose or reason.

Sworn/affirmed by Karen Lynn Bennett, before me at Norfolk County, in the Province of Ontario this 6th day of July, 2023.

Commissioner for Taking Affidavits, etc.

(Signature of applicant)
Karen Lynn Bennett

Long Point Region Conservation Authority

4 Elm Street
Tillsonburg, ON
N4G 0C4
Phone (519) 842-4242
Fax (519) 842-7123
www.lprca.on.ca

PERMIT No. LPRCA-13/22

FOR DEVELOPMENT, INTERFERENCE WITH WETLANDS & ALTERATIONS TO SHORELINES & WATERCOURSES

(CONSERVATION AUTHORITIES ACT - ONTARIO REGULATION 178/06, UNDER O.REG.97/04)

Permission has been granted to:

Owner:	**Thomas Land**	**Telephone:**	**519-410-3339**
Address:	**197 Cedar Drive**	**Postal Code:**	**N0E 1T0**
	Turkey Point, ON		
Agent :		**Telephone:**	
Address:		**Postal Code:**	

Location/Address of works: **9 Snooks Drive; 33.10.493.110.37200**

Lot: **3** **Plan:** **226** **Municipality:** **Norfolk**

Description of Works: Recognize the repair/reconstruction of the existing residential structure, on a pier foundation, within the same footprint.

Type of fill:

This permit is valid on the above location only for the period of:

DATE: January 20, 2022 to January 20, 2024

This permit shall be subject to the following conditions:

The Applicant and owner, by acceptance of and in consideration of the issuance of this permit, agrees to the following conditions:

GENERAL CONDITIONS: (SEE REVERSE SIDE OF PERMIT)

SPECIFIC CONDITIONS :

1. Locations and dimensions of proposed works must be as indicated on the enclosed copy of the work permit application dated January 17, 2022 and the associated information.

GENERAL CONDITIONS:

1. This permit does not preclude any approvals required by any other laws or regulations.
2. Temporary sediment & erosion control measures shall be installed around any disturbed and/or exposed ground or excavated material stockpiles, remain in place until the site has been suitably stabilized, and must be monitored regularly to ensure effectiveness. Remedial/Emergency measures must be taken at any sign of failure. This step is considered necessary to prevent the undesirable migration of silt.
3. The Conservation Authority should be contacted within 48 hours prior to the commencement of construction.
4. Authorized representatives of the Long Point Region Conservation Authority may at any time enter onto the lands which are described herein in order to make any surveys, examinations or inspections which are required for the purpose of insuring that the work(s) authorized by this permit are being carried out according to the terms of this permit.
5. It is the responsibility of the permittee to ensure the development is located within the extent of the property boundaries owned by the proponent.
6. This permit is not assignable.
7. The project shall be carried out generally as per the plans submitted in support of the application as they may be amended by conditions of this permit.
8. This approval does not guarantee the soundness of the proposed work and it is the responsibility of the permittee to monitor and maintain the construction activity to ensure the integrity of the work.
9. The applicant agrees to maintain all existing drainage patterns.
10. Any activity or development other than that identified in this permit application must be reviewed by the LPRCA; at which time, staff will determine if additional approvals or an amended permit will be required.
11. Permits are valid for two years. No notice will be issued on expiration of the permit and it is the responsibility of the permittee to ensure a valid permit is in effect at the time work is occurring.

Long Point Region Conservation Authority

4 Elm Street, Tillsonburg, ON N4G 0C4
Tel: (519) 842-4242 Fax: (519) 842-7123
Email: planning@lprca.on.ca Website: www.lprca.on.ca

Permit Application – Schedule A

REGULATION OF DEVELOPMENT, INTERFERENCE WITH WETLANDS AND ALTERATIONS TO SHORELINES AND WATERCOURSES (R.R.O. 1990 REG.178/06)

Application #
LPRCA -
Office Use Only

Applicant/ Owner's Name: Thomas Land

Mailing Address: 197 Cedar Drive
Street Address *P.O. Box* *Apartment/Unit #*

Turkey Point ON N0E1T0
City/Town *Province* *Postal Code*

Primary Phone: 519 410 3339 Alternate Phone: Email: tommyland8@gmail.com

Agent's Name: ☑ Check if same as above

Mailing Address:
Street Address *P.O. Box* *Apartment/Unit #*

City/Town *Province* *Postal Code*

Primary Phone: Alternate Phone: Email:

Location of Proposed Work

Lot: Concession/Plan: Municipality: [redacted] Norfolk County

Municipal Address: 9 Snooks Drive, Turkey Point ON N0E1T0
Street Address

Tax Assessment Roll Number: 331049311037200

Proposed work: (Check all appropriate boxes)

- ☐ Place, dump, or remove fill
- ☐ Site grading
- ☐ Construct a new building or structure
- ☑ Alter or renovate an existing building or structure
- ☐ Construct a septic system
- ☐ Construct erosion control or shoreline protection
- ☐ Construct new or replace existing watercourse crossing
- ☐ Other: (please describe)

Quantity of fill:

Proposed square footage:

Existing square footage:

Description of Proposed Works: Rebuilding the cottage on the existing foundation, replacing all doors and windows, adding a proper heat source, replacing all electrical, and adding closed cell spray foam insulation

PROPOSED START DATE: January 25th 2022 **PROPOSED COMPLETION DATE:** March 1st 2022

I understand that the information contained in this application form is accurate to the best of my knowledge and that the staff of the Long Point Region Conservation Authority (LPRCA) will undertake a detailed inspection of the subject lands as part of the application process.

Tommy Land
0qlybfsJlVL0p/gqIu0aOQ==
Applicant Signature

Jan 17, 2022, 07:06 PM EST
Date

Tommy Land
0qlybfsJlVL0p/gqIu0aOQ==
Agent Signature

Jan 17, 2022, 07:06 PM EST
Date

Development, Interference with Wetlands and Alterations to Shorelines and Watercourses
Ontario Regulation 178/06

PROPERTY OWNER AUTHORIZATION

Subject Property

Property Location 9 Snooks Drive, Turkey Point ON N0E1T0

Municipal Address or Lot and Concession or Lot and Plan

Municipality Norfolk County Community

I/We Thomas Land

Hereby authorize Thomas Land

To provide as my agent any required authorizations or consents, to submit the enclosed application to the Long Point Region Conservation Authority, and to appear on my behalf at any hearing(s) of the application and to provide any information or material required by the Board relevant to the application for the purposes of obtaining permission to develop, interfere with a wetland or alter a shoreline or watercourse in accordance with the requirements of Ontario Regulation 178/06 as amended.

Signature of Owner: Tommy Land 0qIybfsJlVL0p/gqIu0aOQ== Date: Jan 17, 2022, 07:06 PM EST

APPLICATION FORM INSTRUCTIONS

Owner The legal owner(s) of the property where the proposed development or alteration will be carried out.

Applicant If the applicant is not the same as the property owner, written authorization is required from all property owners on whose property the proposed work will be carried out. The authorization(s) must be submitted with the application.

Agent If the applicant has assigned another party as an agent to act on the applicant's behalf for the project, written authorization from the applicant is required so stating.

Quantity of Fill Approximate quantity expressed in cubic metres, cubic yards, truck loads (12 yards) or tandem truck loads (18 yards)

Floor area For residential development, area of living space including full height basement and additional storeys, but not including attached garage, non-habitable crawl space, open breezeways, decks or porches.

APPLICATION CHECKLIST

Office Use Only
Application # LPRCA-_____
List Issued: _____

Submission: LPRCA permit applications along with supporting information may be submitted in person to our office, or by fax, email or mail.

Pre-consultation: Please contact LPRCA staff regarding the requirements specific to your proposal. Also, please make sure your contractors and consultants contact LPRCA staff before completing detailed drawings or technical studies.

Complete application: A complete application package includes (check all applicable):

Applicable	Submitted	
✓	☐	A completed, signed and dated application form;
✓	☐	Written authorization (if the applicant is not the owner of the property where the work is being done)
✓	☐	Written authorization (if the property owner is assigning another party as an agent for the project);
✓	☐	Application fee (see fee schedule, fees subject to change without notice);
✓	☐	A scaled and detailed site plan;
✓	☐	A scaled cross-sectional drawing and floor plans;

Drawings: One copy of all project drawings, reports, unless otherwise requested. Hardcopy drawings must be provided and readable on sheets no larger than 11" x 17". Electronic submission of drawings and reports is preferred. The drawings should include (either as part of the illustration or as notes).

✓	☐	Legal description of the property (e.g. roll number, lot, concession, municipality);
✓	☐	Scale, date, and directional arrow;
✓	☐	Dimensions of the property (a copy of a legal survey may be required);
✓	☐	Location, dimensions and geodetic elevations of all existing and proposed structures, grading, filling, excavating, and the distance to any waterbody(s) (e.g. wetlands, streams, lakes), valleys, steep slopes on or adjacent to the property;
✓	☐	Location and type of sediment and erosion control measures (e.g. silt fence) and soil stabilization measures (e.g. seeding, sodding, planting)

Technical reports: One or more of the following technical reports may be required (as advised by LPRCA staff).

☐	☐	Design drawings and description of the design elements for flood-proofing measures, stamped and certified by a qualified professional engineer (for development in floodplains and flood hazard areas)
☐	☐	Slope stability study and erosion analysis, prepared by a qualified professional with expertise in geotechnical engineering, to determine the stable top-of-bank, the minimum development setback to address the potential erosion hazards, and associated foundation, construction, grading and drainage recommendations, in accordance with the Provincial Technical Guidelines (for development in erosion hazard areas)
☐	☐	Coastal engineering assessment prepared by a qualified professional with expertise in coastal engineering in accordance with LPRCA's Shoreline Management Plan and the Provincial Technical Guidelines addressing hydrodynamic forces affecting the design and indicating how the aggravation of erosion on neighbouring properties is avoided (for shoreline alterations).
☐	☐	Environmental Impact Study (EIS) clearly indicating that there will be no negative impact to the form or function of the wetland to the satisfaction of LPRCA (for development near wetlands)
☐	☐	Hydraulic analysis by a qualified professional engineer addressing flood conveyance, storage-discharge, and changes in flood levels on-site and on adjacent properties (for development in floodplains, watercourse alterations).
☐	☐	Complex and large-scale proposals may require additional technical studies and plans.

For Office Use Only	
Application Submitted:	
Complete Application:	
Application Fee:	Paid:
Board Approval Required Date of Board Meeting:	

GENERAL CONDITIONS OF PERMIT

1. This permit does not absolve the permittee of the responsibility of obtaining necessary permission from applicable federal and provincial agencies or local municipalities.
2. The permittee agrees by acceptance of the permit:
   a) to indemnify and save harmless, the Long Point Region Conservation Authority and its officers, employees, or agents, from and against all damage, injury, loss, costs, claims, demands, actions and proceedings, arising out of or resulting from any act or omission of the permittee or of any of his agents, employees or contractors relating to any of the particular terms or conditions of this permit.
   b) that this permit shall not release the permittee from any legal liability or obligation and remains in force subject to all limitations, requirements, requirements and liabilities imposed by law.
   c) to provide certification of conformance to ensure compliance with the intent of the permit. This certification must be provided by an accredited professional and is to be submitted as may be specified in the permit.
3. Authorized representatives of the Long Point Region Conservation Authority will be granted entry at any time into lands and buildings which are the subject of this permit application in order to make such surveys, examinations, investigations, inspections or other arrangements which such representatives deem necessary.
4. The project shall be carried out generally as per the plans submitted in support of the application as they may be amended by conditions of this permit.
5. Any activity or development other than that identified in this permit application must be reviewed by the LPRCA; at which time, staff will determine if additional approvals or an amended permit will be required.
6. The Long Point Region Conservation Authority may cancel this permit or may change any of the conditions at any time and without prior notice if it is determined that:
   a) the works are not in conformance with the intent of the permission granted;
   b) the information presented to obtain a permit is false;
   c) the works or method of construction has detrimental impacts on the environment.
7. Temporary sediment & erosion control measures shall be installed around any disturbed and/or exposed ground or excavated material stockpiles, remain in place until the site has been suitably stabilized, and must be monitored regularly to ensure effectiveness. Remedial/Emergency measures must be taken at any sign of failure.
8. The applicant agrees to maintain all existing drainage patterns except as expressly identified in this permit.
9. It is the responsibility of the permittee to ensure the development is located within the extent of the property boundaries owned by the proponent.
10. This approval does not guarantee the soundness of the proposed work and it is the responsibility of the permittee to monitor and maintain the construction activity to ensure the integrity of the work.
11. This permit shall not be assigned (non-transferable).
12. Permits are valid for two years. No notice will be issued on expiration of the permit and it is the responsibility of the permittee to ensure a valid permit is in effect at the time work is occurring.
13. The Conservation Authority should be contacted within 48 hours prior to the commencement of construction.
14. The Long Point Region Conservation Authority may make copies of Schedule A, as required, for the purposes of assessing the proposal and, where approved, to form part of the permit issued.

NOTICE OF COLLECTION

Pursuant to section 29(2) of the Municipal Freedom of Information and Protection of Individual Privacy Act, 1989, the personal information contained on this form is collected under the legal authority of the Conservation Authorities Act, R.S.O. 1980, c85, as amended. This information is used to assess applications for and, where approved, issue comment. The name of the applicant, location of the work and a description of the project may be published in LPRCA documents, including agendas, reports and meeting minutes which are posted on the LPRCA website. Questions about the collection of personal information should be directed to the Freedom of Information Coordinator, Long Point Region Conservation Authority, 4 Elm Street, Tillsonburg, Ontario, N4G 0C4, (519) 842-4242.

9 Snooks Drive

Turkey Point ON NOE ITO

Proposed Reno

&

Drawings

front

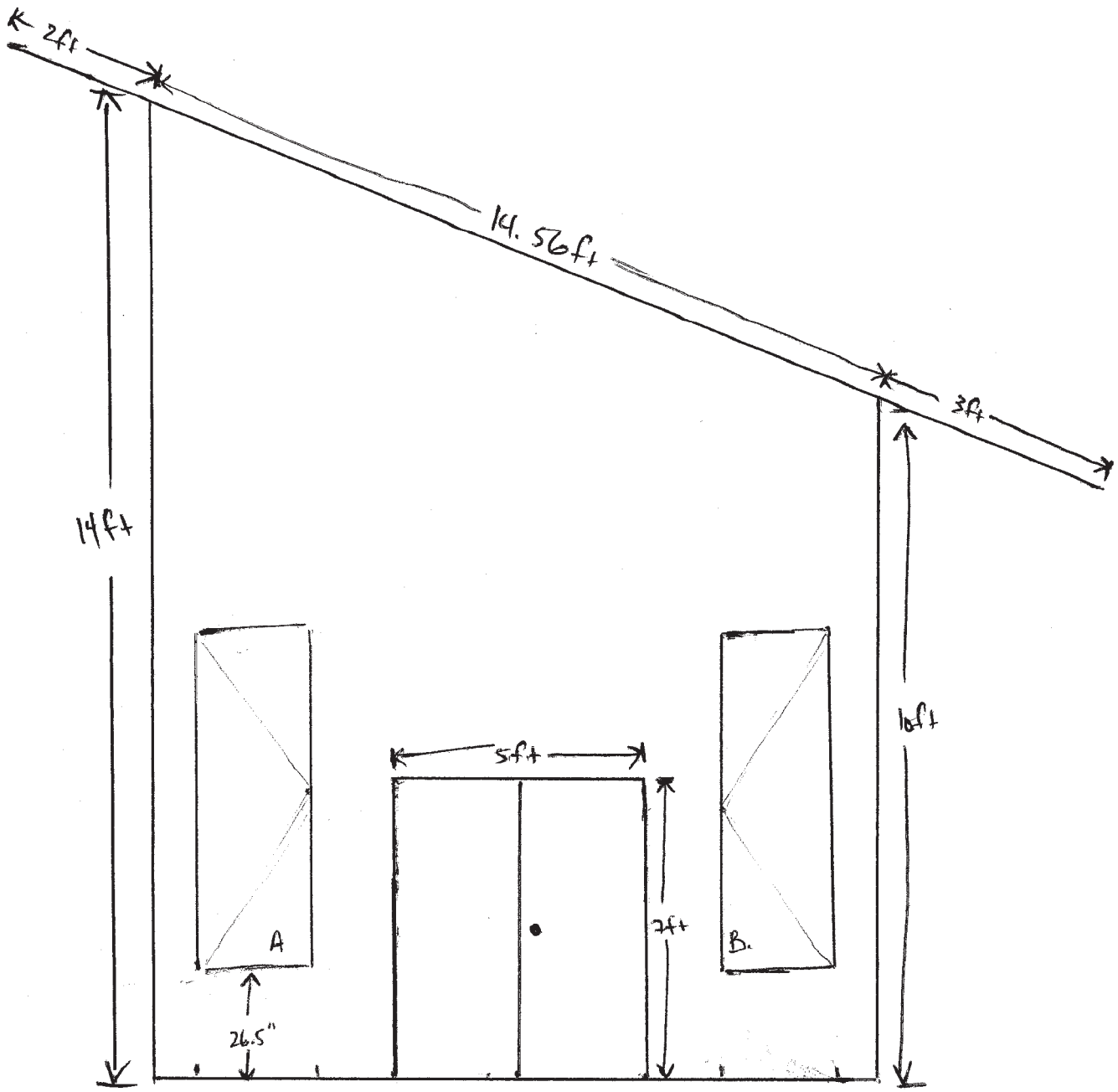

A 24" x 66" casement window

B 24" x 66" casement window

Back.

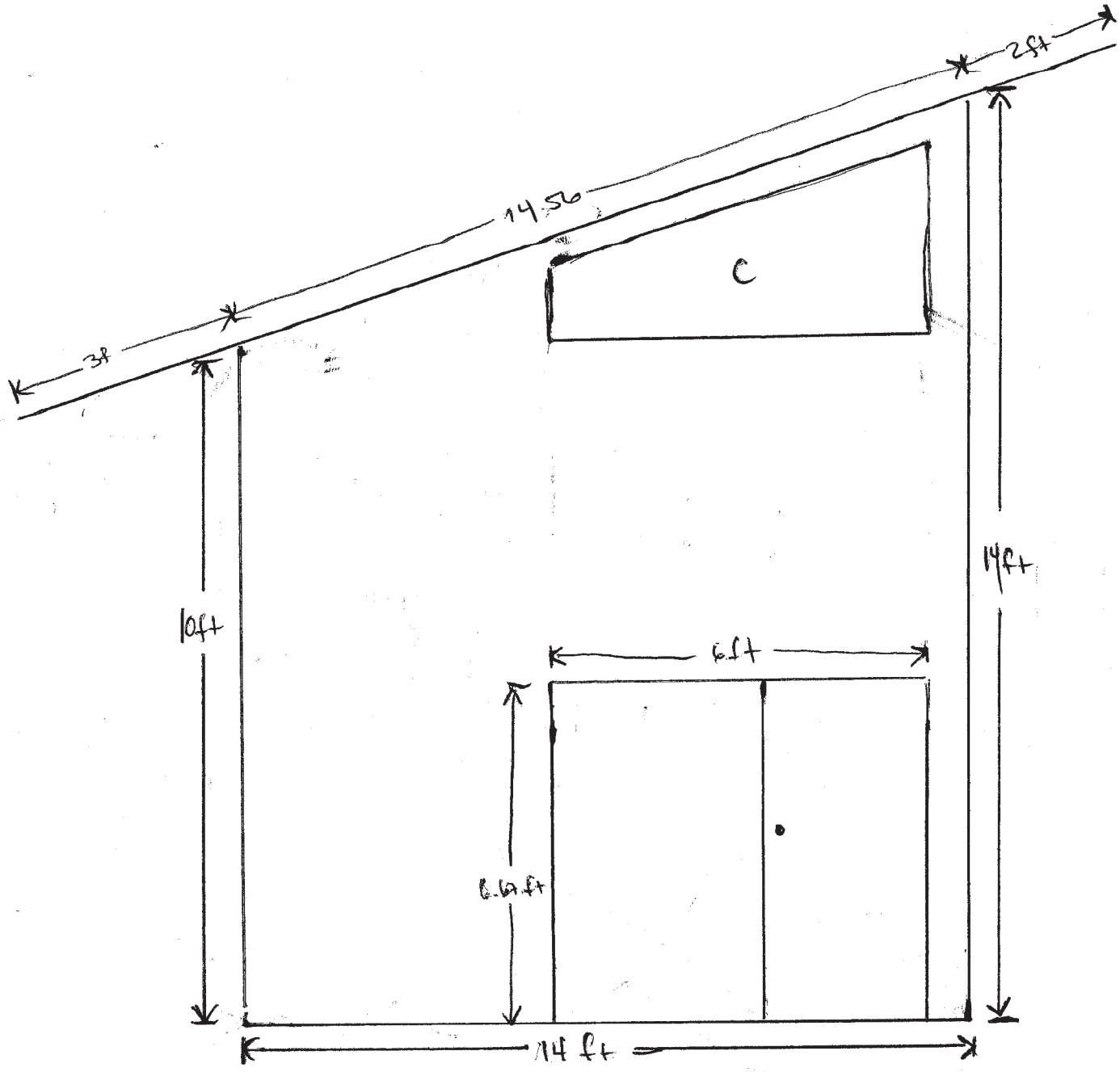

left.

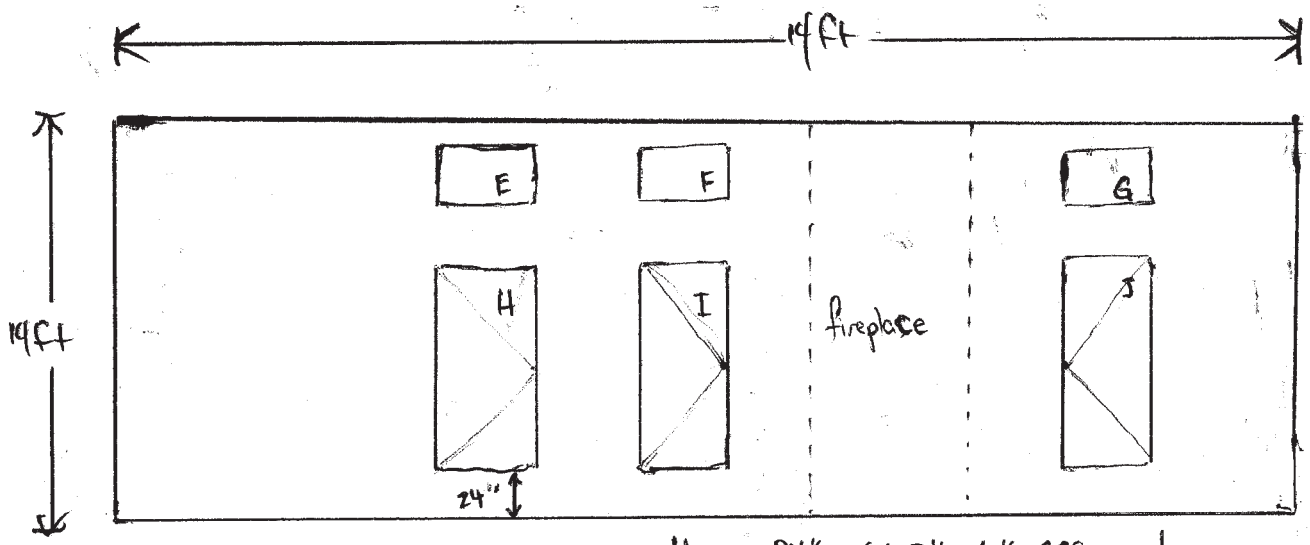

E 24" x 16" fixed
F 24" x 16" fixed
G 24" x 16" fixed

H 24" x 60" LH casement
I 24" x 60" LH casement
J 24" x 60 LH Casement

Right.

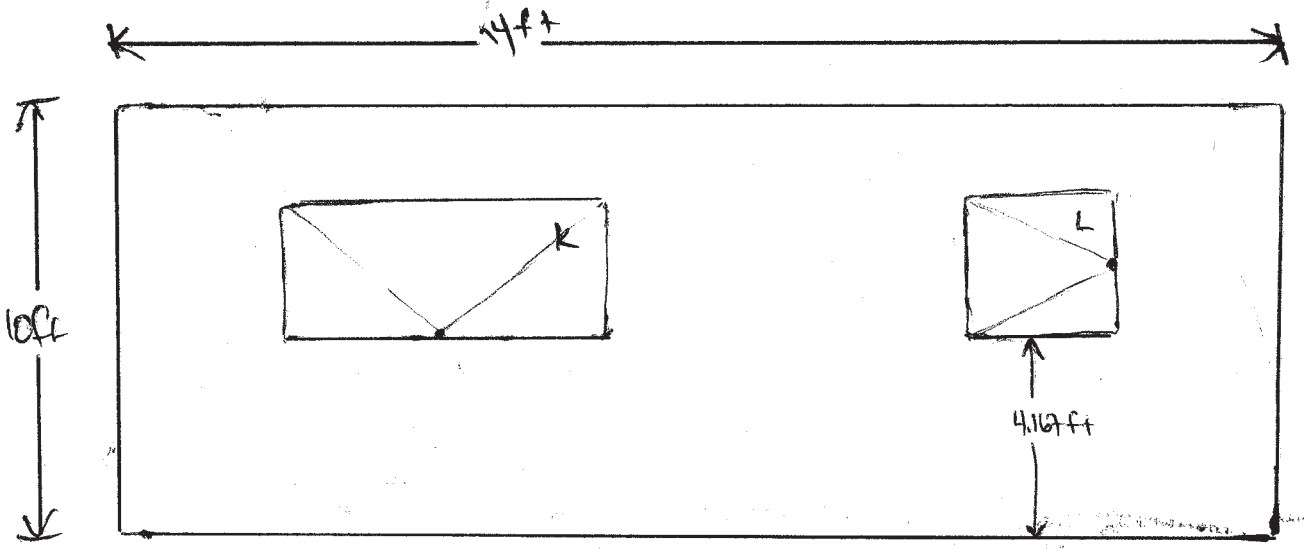

K 24" x 60" casement

L 30" x 36" RH casement frosted.

floor Plan

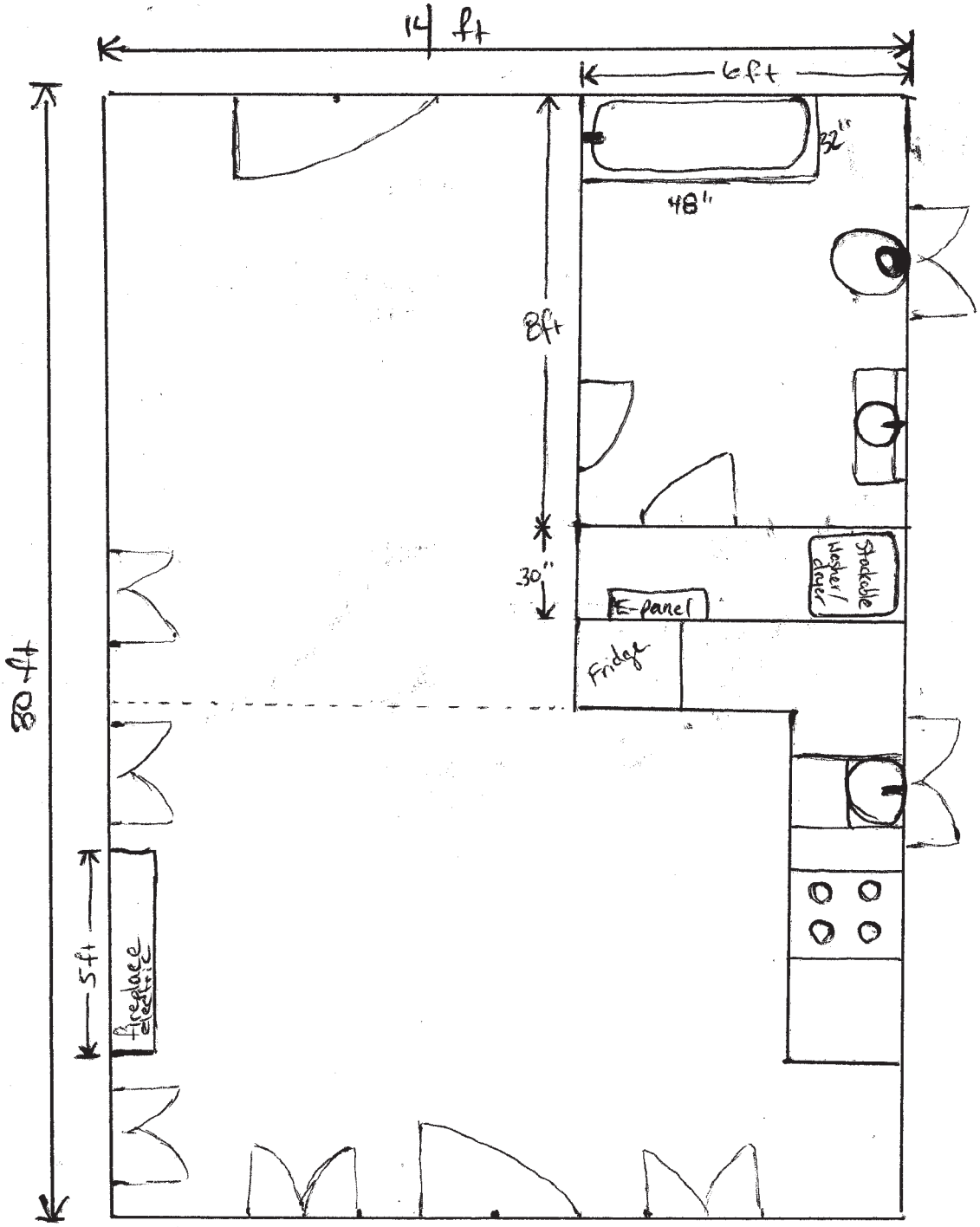
14 ft
6ft
32"
48"
8ft
30"
Stackable Washer/ dryer
E-panel
Fridge
28 ft
5ft
fireplace

Norfolk County
Working together with our community to provide quality services.

Evaluation Form for Existing On-Site Sewage Systems

Date: July 2009

OFFICE USE ONLY	**FILE NO.:**	**DATE RECEIVED:**	
PROPERTY INFORMATION	Municipal Address: 9 SNOOKS DR. TURKEY POINT		
Owner: THOMAS LAND		Lot: PT LT 3 PL 226	Concession:
Lot Area: 3150 sq'	Lot Frontage: 50'	Assessment Roll No.	
PURPOSE OF EVALUATION	☐ Consent ☐ Minor Variance ☐ Site Plan ☐ Zoning ☐ Other APPLICATION TO CONSTRUCT		
BUILDING INFORMATION	☑ Residential ☐ Commercial ☐ Industrial ☐ Agricultural		
Building Area: 505 sq ft	No. of Bedrooms: 1	No. of Fixture Units:	Is the building currently occupied? Yes / (No) If No, how long?
EVALUATOR'S INFORMATION	Evaluator's Name: BRAD DEMING	Company Name: BRAD DEMING PROJECT MANAGEMENT	
Address: 235794 Airport Rd, Norwich, On. N0J 1P0		Postal Code: N0J 1P0	Phone: 519-603-2723
Email: deming@speedlink.com		BCIN # 10392 19011	
SITE EVALUATION	Ground Cover (trees, bushes, grass, impermeable surface):	Soil Type: SAND	
Site Slope: ☑ Flat ☐ Moderate ☐ Steep	Soil Conditions: ☐ Wet ☑ Dry	Depth of Water Table: 2 ft.	
Surface Discharge Observed: Yes No	Odour Detected: Yes (No)	Current Weather (at time of evaluation): COLD & DRY	
SYSTEM EVALUATION	Class of System: ☐ 1 (Privy) ☐ 2 (Greywater) ☐ 3 (Cesspool) ☐ 4 (Leaching Bed) ☑ 5 (Holding Tank)		
Tank: ☑ Pre-cast ☐ Plastic ☐ Fibre Glass ☐ Wood ☐ Other _____		Size: 2000 Gal.	Pump: Yes (No)
Distribution System: Area: ☐ Trench Bed ☐ Filter Medium	No. of Tile Runs:	Total Length of Tile:	Distance Between Tile Runs:
Tile Material: ☐ PVC ☐ Clay ☐ Other	Ends: ☐ Capped ☐ Joined	Cover: ☐ Filter Cloth ☐ Sand ☐ Top Soil ☐ Seeded	

Setbacks:	Tank	Distribution Pipe
Distance to Buildings & Structures (ft)		
Distance to Bodies of Water (ft)		
Distance to Nearest Well (ft)		
Distance to Proposed Property Lines	Front ____ Rear ____ Side ____ Side ____	Front ____ Rear ____ Side ____ Side ____

OVERALL SYSTEM RATING

- ☑ System Working Properly / No Work Required
- ☐ System Functioning / Maintenance Required
- ☐ System Not Functioning / Minor Repair Required
- ☐ System Failure/Major Repair / Replacement Required

Schedule A – ORIGINAL COTTAGE

Schedule B – AFTER RENOVATIONS

Note:
Any repair/replacement of an on site sewage system requires a building permit. Contact the Norfolk County Building Division at (519) 426-4377 for more information.

Additional Comments: The original cottage layout was 420 sq ft, 2 Bedrooms and 7 1/2 fixtures which is 1100 L/D. The new renovations make the cottage a 1 Bedroom, 505 sq ft with 9 fixtures which is 750 L/D. The existing holding tank is 9000 L (2000 gal) so 750 L x 7 = 5250 L. The existing tank is good for 2 Bedroom

VERIFICATION

OWNER:
The owner is responsible for having a site evaluation conducted of the above mentioned property. Neither the evaluation nor the approval thereof shall in any way exempt the owner(s) from complying with the Ontario Building Code or any other applicable law.

I, THOMAS LAND (the owner of the subject property) hereby authorize the above mentioned evaluator to act on my behalf with respect to all matters pertaining to the existing on-site sewage system evaluation.

Tommy Land
2ggyEsqCDTNBYDhlGvWVYg==
Owner Signature

Jan 17, 2022, 06:50 PM EST
Date

EVALUATOR:

1. I, BRAD DEMING declare that this site evaluation is accurate as of the date of inspection. No determination of future performance can be made due to unknown conditions, future water usage over the life of the system, abuse of the system and/or inadequate maintenance, all of which may adversely affect the life of the system. This evaluation does not grant or imply any guarantee or warranty of the future performance of the sewage system. The undersigned takes no responsibility for the accuracy of existing or proposed property lines, whether measured or implied.

Brad Deming
Evaluator Signature

Date Jan 17/22

BUILDING DIVISION COMMENTS

Comments: _____

I, _____ have reviewed the information contained in this form as submitted.

Chief Building Official or designate

Date

Revised: March 24, 2012

Schedule A

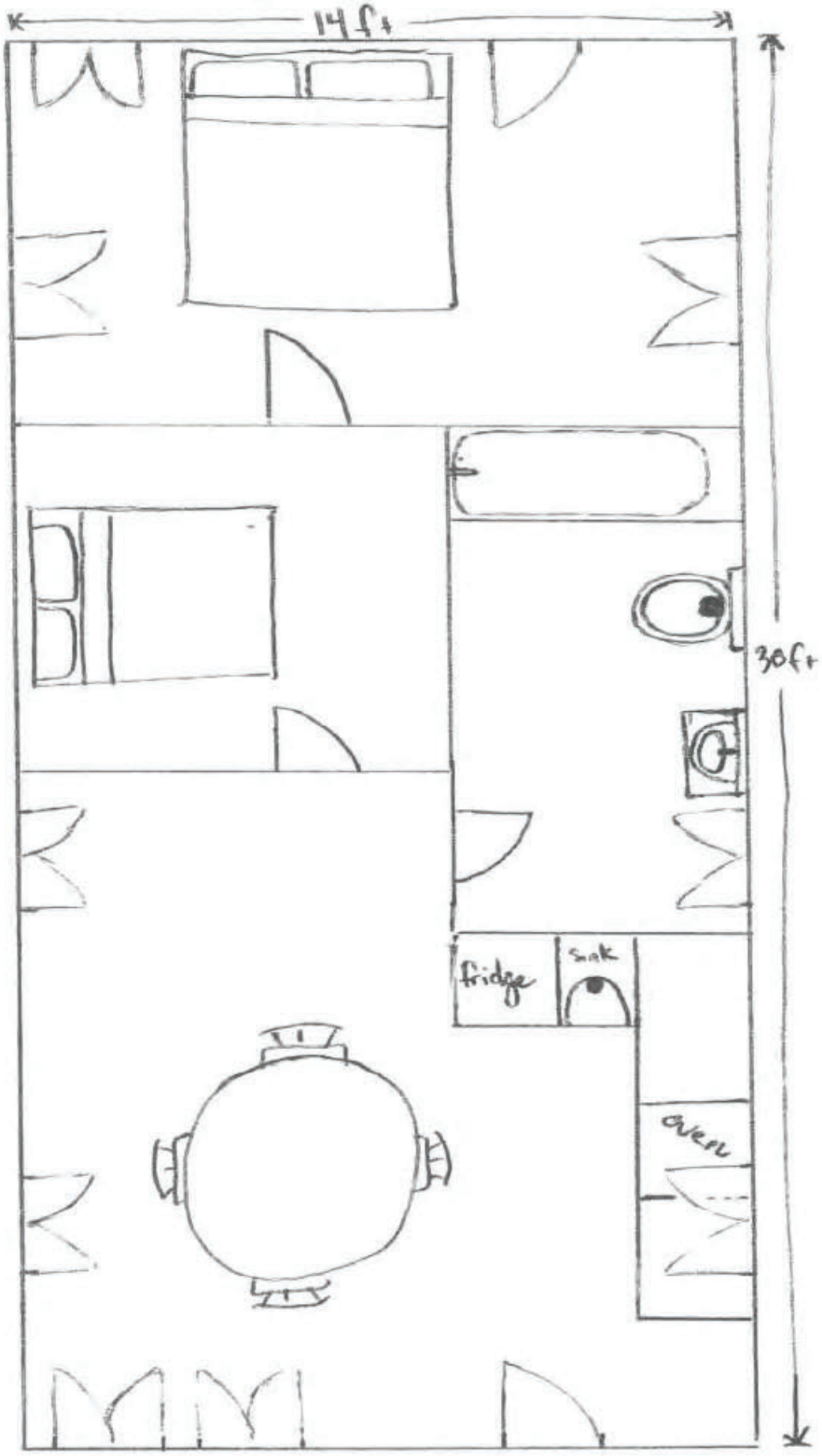

Original floor plan

Schedule B

Floor Plan

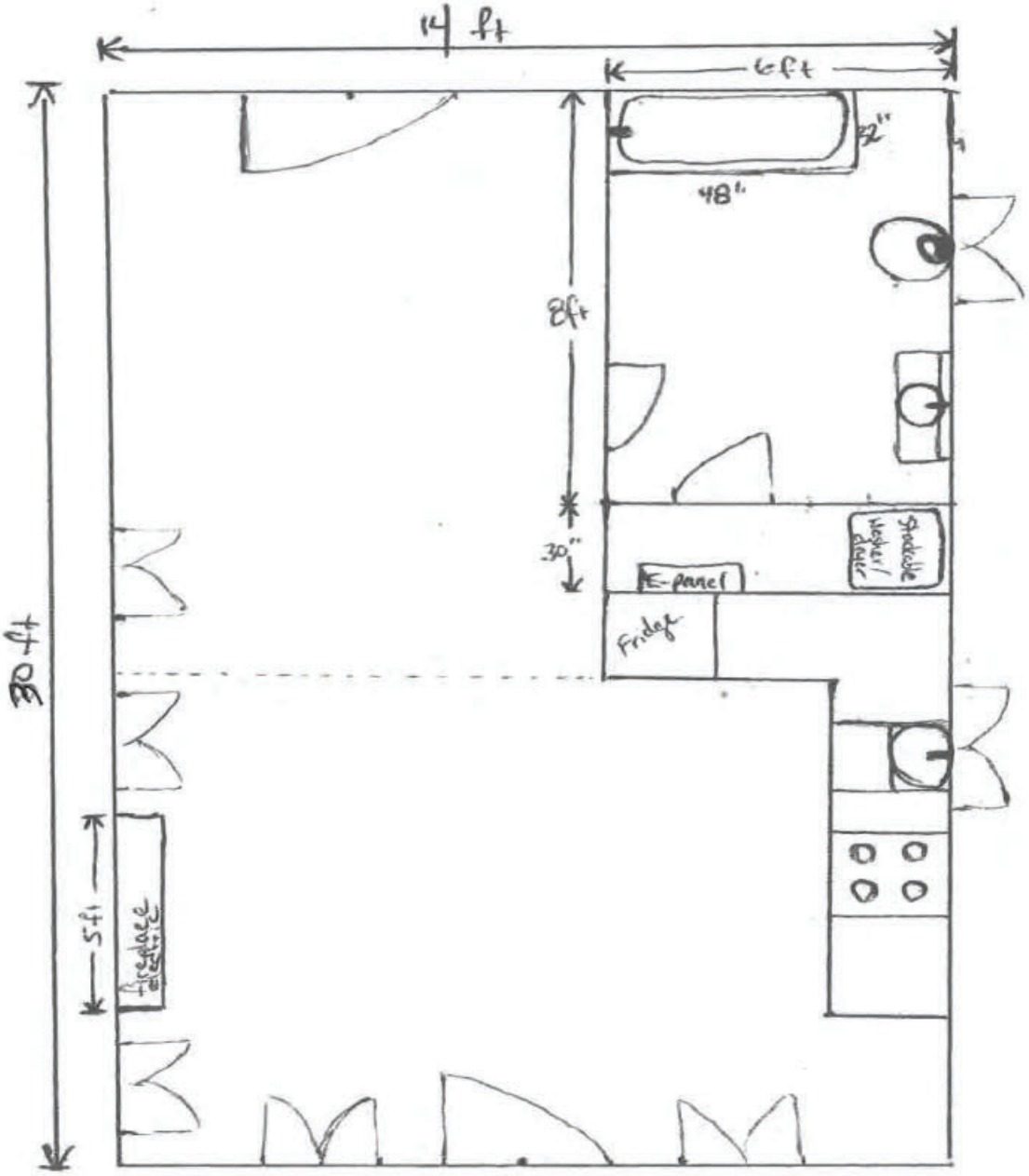

Plot Plan

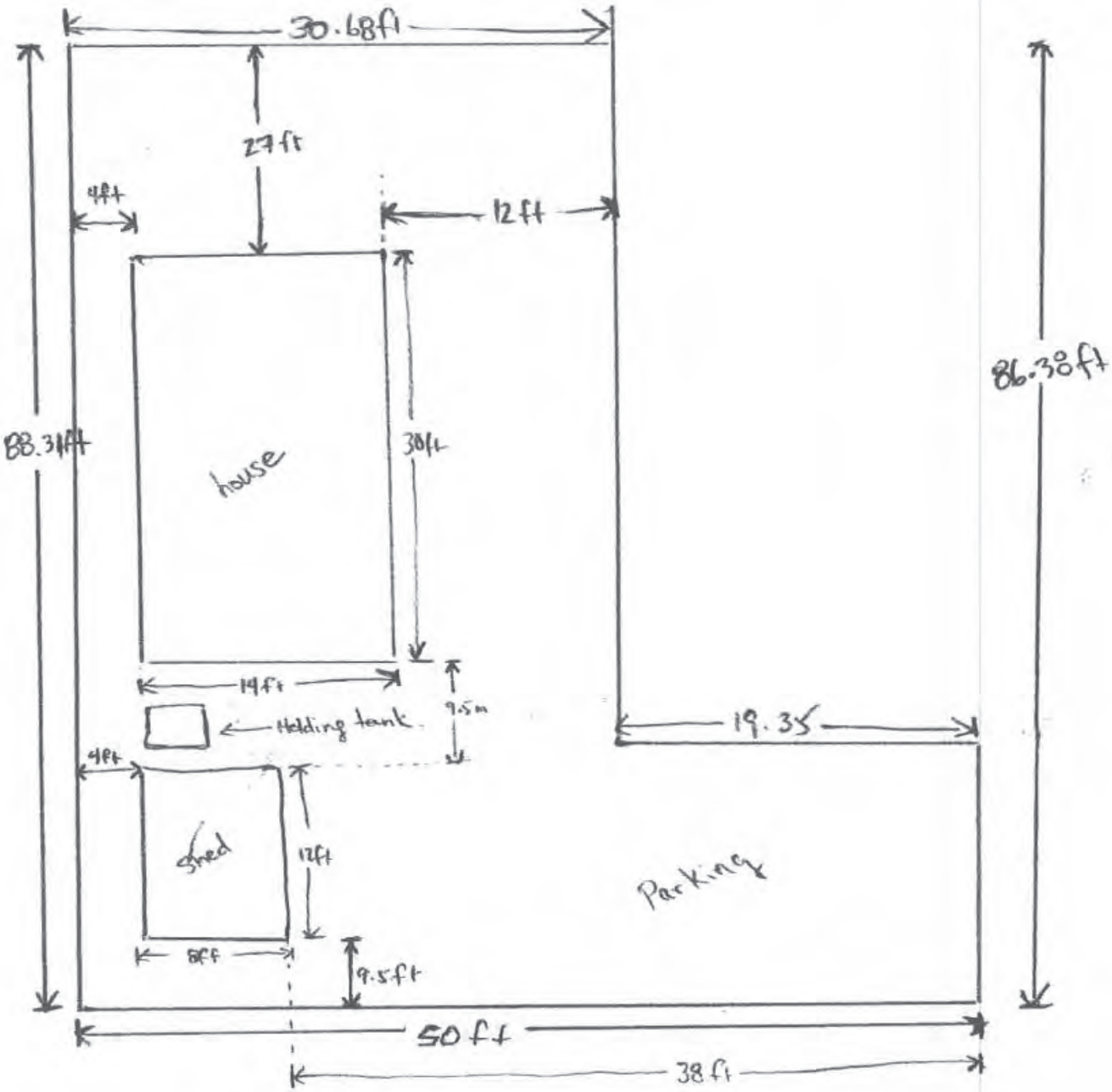

Note: holding tank & foundation are existing and are not and will not be modified or changed in any way.

Bayside Septic Services (2012) Inc.

685 Highway 24 West
St. Williams, ON, N0E 1P0
519-586-3195
baysideseptic@gmail.com

January 12th, 2022

To whom it may concern

Bayside Septic Services (2012) Inc. was at 9 Snooks Drive in Turkey Point on January 12th 2022. The holding tank size was a 2000 Gal tank and was in good working order and functioning properly at the time of inspection with no signs of leakage.

Sincerely,

Darrell Chambers
Owner/Operator
Bayside Septic Services (2012) Inc.
685 Highway 24 West
St. Williams, ON, N0E 1P0
519-586-3195


Tyvek
HomeWrap
RONA

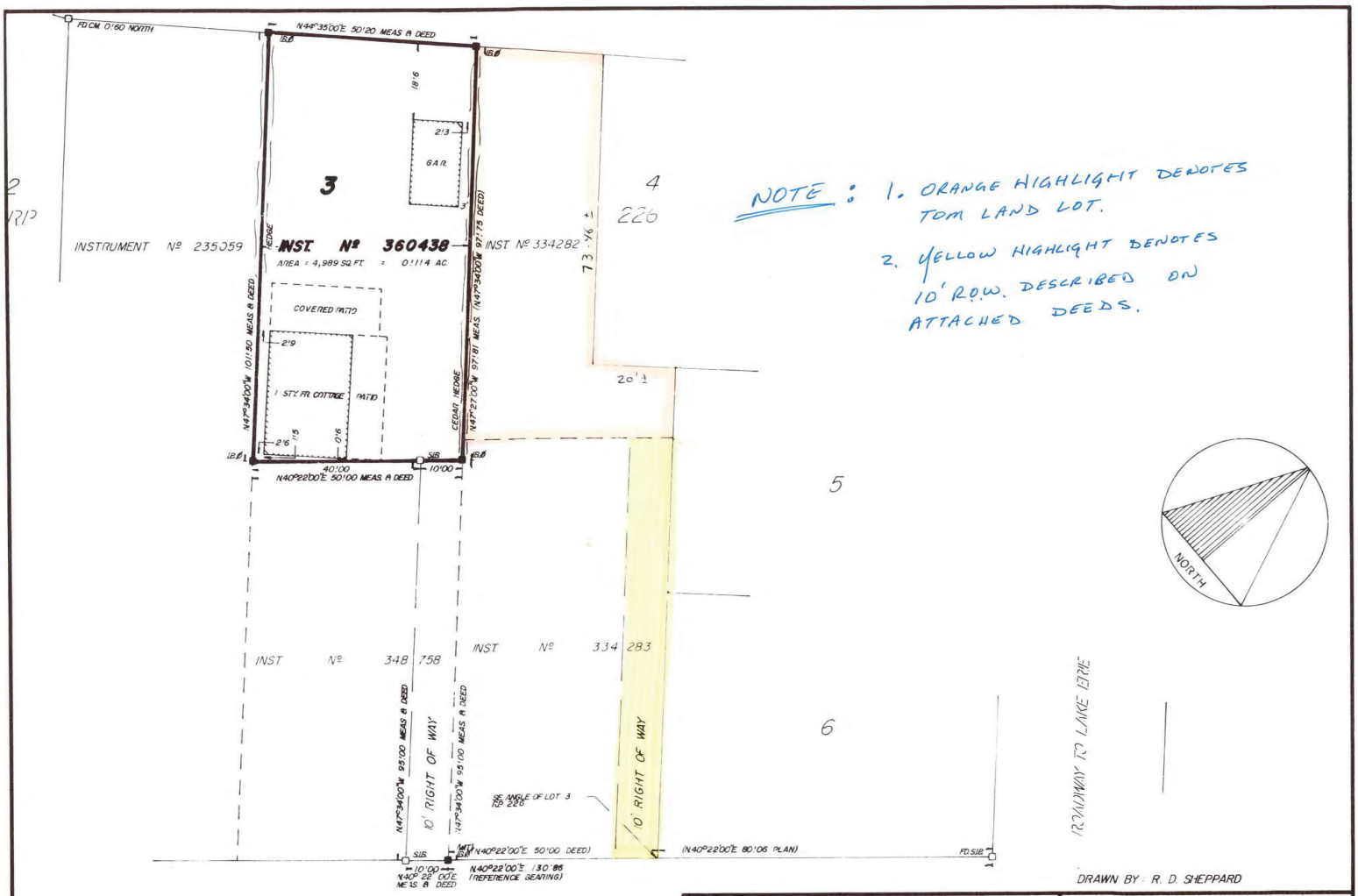

NOTE: 1. ORANGE HIGHLIGHT DENOTES TOM LAND LOT.

2. YELLOW HIGHLIGHT DENOTES 10' R.O.W. DESCRIBED ON ATTACHED DEEDS.

DRAWN BY: R. D. SHEPPARD

PLAN OF SURVEY
SHOWING PART OF
LOT 3 · REG'D. PLAN 226
FORMERLY IN THE CHARLOTTEVILLE
COUNTY OF NORFOLK (37)
NOW IN THE
TOWNSHIP OF DELHI
REGIONAL MUNICIPALITY OF
HALDIMAND — NORFOLK
SCALE 1" = 20'
1977

SURVEYOR'S CERTIFICATE
I HEREBY CERTIFY THAT:
i) THIS SURVEY AND PLAN ARE CORRECT AND IN ACCORDANCE WITH THE SURVEYS ACT AND THE REGISTRY ACT AND THE REGULATIONS MADE THEREUNDER.
ii) THE SURVEY WAS COMPLETED ON THE 31st DAY OF MAY 1977.
DATED THIS 6th DAY OF JUNE 1977.
JOHN B. DODD
ONTARIO LAND SURVEYOR

John B. Dodd Ltd.
Ontario Land Surveyors,
65 Queensway East, Simcoe, Ontario N3Y 4M5
King Street, P.O. Box 231, Cayuga, Ontario N0A 1E0

S.I.B. — DENOTES 1" x 1" x 48" IRON BAR.
I.B.Ø — DENOTES 3/4" Ø x 24" IRON BAR.
BEARINGS ARE

—x— DENOTES FENCE LINE.
FD. DENOTES FOUND MONUMENT.

GRUMMETT

FILE Nº S-2017-R

MAP NORFOLK - Community Web Map

- BLUE OUTLINE IS TOM LAND LOT.
- YELLOW HIGHLIGHT IS 10 FT R.O.W. OVER NEIGHBOURS LOT.

9/9/2022, 12:33:12 PM

1:500

0 0.004 0.008 0.016 mi

0 0.005 0.01 0.02 km

- Land Parcels
- Civic Address
- Plan Lines
- Reg Plan Lot Numbers
- Road Labels
- DraftPlan

Queen's Printer for Ontario
Norfolk GIS

ServiceOntario

PRINTED ON 09 SEP, 2022 AT 12:28:48
FOR JENNIFER01

SCALE

0 20 meters

PROPERTY INDEX MAP

NORFOLK(No. 37)

LEGEND

FREEHOLD PROPERTY	
LEASEHOLD PROPERTY	
LIMITED INTEREST PROPERTY	
CONDOMINIUM PROPERTY	
RETIRED PIN (MAP UPDATE PENDING)	
PROPERTY NUMBER	0449
BLOCK NUMBER	08050
GEOGRAPHIC FABRIC	
EASEMENT	----

THIS IS NOT A PLAN OF SURVEY

NOTES

REVIEW THE TITLE RECORDS FOR COMPLETE PROPERTY INFORMATION AS THIS MAP MAY NOT REFLECT RECENT REGISTRATIONS

THIS MAP WAS COMPILED FROM PLANS AND DOCUMENTS RECORDED IN THE LAND REGISTRATION SYSTEM AND HAS BEEN PREPARED FOR PROPERTY INDEXING PURPOSES ONLY

FOR DIMENSIONS OF PROPERTIES BOUNDARIES SEE RECORDED PLANS AND DOCUMENTS

ONLY MAJOR EASEMENTS ARE SHOWN

REFERENCE PLANS UNDERLYING MORE RECENT REFERENCE PLANS ARE NOT ILLUSTRATED

Ontario

Ontario ServiceOntario

PARCEL REGISTER (ABBREVIATED) FOR PROPERTY IDENTIFIER

LAND
REGISTRY
OFFICE #37

50265-0295 (LT)

PREPARED FOR jennifer01
ON 2022/09/09 AT 12:28:57

* CERTIFIED IN ACCORDANCE WITH THE LAND TITLES ACT * SUBJECT TO RESERVATIONS IN CROWN GRANT *

PROPERTY DESCRIPTION: PT LT 3 PL 226 AS IN NR416434; T/W NR416434; NORFOLK COUNTY

PROPERTY REMARKS:

ESTATE/QUALIFIER:
FEE SIMPLE
LT CONVERSION QUALIFIED

RECENTLY:
FIRST CONVERSION FROM BOOK

PIN CREATION DATE:
2007/06/25

OWNERS' NAMES
LAND, THOMAS

CAPACITY SHARE

REG. NUM.	DATE	INSTRUMENT TYPE	AMOUNT	PARTIES FROM	PARTIES TO	CERT/ CHKD
** PRINTOUT INCLUDES ALL DOCUMENT TYPES (DELETED INSTRUMENTS NOT INCLUDED) **						
**SUBJECT, ON FIRST REGISTRATION UNDER THE LAND TITLES ACT, TO:						
**	SUBSECTION 44(1) OF THE LAND TITLES ACT, EXCEPT PARAGRAPH 11, PARAGRAPH 14, PROVINCIAL SUCCESSION DUTIES *					
**	AND ESCHEATS OR FORFEITURE TO THE CROWN.					
**	THE RIGHTS OF ANY PERSON WHO WOULD, BUT FOR THE LAND TITLES ACT, BE ENTITLED TO THE LAND OR ANY PART OF					
**	IT THROUGH LENGTH OF ADVERSE POSSESSION, PRESCRIPTION, MISDESCRIPTION OR BOUNDARIES SETTLED BY					
**	CONVENTION.					
**	ANY LEASE TO WHICH THE SUBSECTION 70(2) OF THE REGISTRY ACT APPLIES.					
**DATE OF CONVERSION TO LAND TITLES: 2007/06/25 **						
NR334281	1971/08/25	AGREEMENT				C
NK141939	2021/06/04	TRANSFER	$235,000	BEDELL, CAROLYN JANE BENNETT, KAREN LYNN DEFIELDS, DEBRA JOAN	LAND, THOMAS	C
NK141940	2021/06/04	CHARGE	$152,750	LAND, THOMAS	YOUR NEIGHBOURHOOD CREDIT UNION LIMITED	C

NOTE: ADJOINING PROPERTIES SHOULD BE INVESTIGATED TO ASCERTAIN DESCRIPTIVE INCONSISTENCIES, IF ANY, WITH DESCRIPTION REPRESENTED FOR THIS PROPERTY.
NOTE: ENSURE THAT YOUR PRINTOUT STATES THE TOTAL NUMBER OF PAGES AND THAT YOU HAVE PICKED THEM ALL UP.

416434

'83 JUN -6 14 11

416434

No.
Registry Division of NORFOLK [No. 37]
I CERTIFY that this instrument is registered as of
2 11 P.M. JUN 6 1983 in the
Land Registry Office at Simcoe Ontario.
Land Registrar

FILMED	
ABSTRACT INDEX	3 P8.
CHECKED	

THIS SPACE TO BE RESERVED FOR CERTIFICATE OF REGISTRATION

PROPERTY OF
NORFOLK REGISTRY
OFFICE NO. 37

REGISTRATION FEE	15.00
LAND TRANSFER TAX	36.00
RETAIL SALES TAX	

Dated May 20th A.D. 19 83

BARBARA JANE PARTRIDGE;

—TO—

JOHN WILLIAM BEDELL, ET UX;
140 Lothian Avenue,
Toronto, Ontario.

Deed of Land

SITUATE

Township of Delhi

Newsome and Gilbert, Limited, — Form 109, 118, 1159 or 1162

ASSESSMENT ROLL NO.

ADDRESS OF PROPERTY:
9 Snook's Drive,
Turkey Point, Ontario.

BRIMAGE, TYRRELL, VAN SEVEREN & HOMENIUK,
Barristers, etc.,
21 Norfolk Street North,
Simcoe, Ontario.
N3Y 4L1 JAB/cs

AFFIDAVIT OF SUBSCRIBING WITNESS

I,
of the
in the

make oath and say:

*See footnote I am a subscribing witness to the attached instrument and I was present and saw it executed at by

*See footnote I verily believe that each person whose signature I witnessed is the party of the same name referred to in the instrument.

SWORN before me at the

this day of 19

A COMMISSIONER FOR TAKING AFFIDAVITS, ETC

* Where a party is unable to read the instrument or where a party signs by making his mark or in foreign character add "after instrument had been read to him and he appeared fully to understand it". Where executed under a power of attorney insert "(name of attorney) as attorney for (name of party)"; and for next clause substitute "I verily believe that the person whose signature I witnessed was authorized to execute the instrument as attorney for (name)".

Newsome and Gilbert, Limited
Form 1189

416434

Deed, with Spousal Consent Clause

7w

This Indenture

made in duplicate the twentieth day of May
one thousand nine hundred and eighty-three

In Pursuance of the Short Forms of Conveyances Act:

Between

BARBARA JANE PARTRIDGE, of the Township of Delhi, in the Regional Municipality of Haldimand-Norfolk, formerly of the Township of Charlotteville, in the County of Norfolk

hereinafter called the "Grantor"
OF THE FIRST PART

and

JOHN WILLIAM BEDELL, of the City of Toronto, in the Municipality of Metropolitan Toronto, and VIOLET FERN BEDELL, his spouse, of the same place,

hereinafter called the "Grantee"
OF THE SECOND PART

and

DONALD FAYE PARTRIDGE, of the Township of Delhi, in the Regional Municipality of Haldimand-Norfolk

husband / ~~wife~~ of the said Grantor,
hereinafter called the "Spouse of the Grantor"
OF THE THIRD PART

Witnesseth that in consideration of ($9,000.00) NINE THOUSAND DOLLARS

now paid by the said Grantee to the said Grantor, the receipt whereof is hereby by him acknowledged, he the said Grantor DOTH GRANT unto the said Grantee in fee simple

THOSE lands and premises located in the following municipality, namely,

In the Township of Delhi, in the Regional Municipality of Haldimand-Norfolk and Province of Ontario

and being ~~comprised of~~ more particularly described in Schedule "A" annexed hereto.

SCHEDULE "A"

ALL AND SINGULAR that certain parcel or tract of land and premises situate, lying and being in the Township of Delhi, in the Regional Municipality of Haldimand-Norfolk and Province of Ontario, formerly in the Geographic Township of Charlotteville, in the County of Norfolk, and being composed of a Northerly and Easterly part of Lot Number Three according to a plan of part of the former Township of Charlotteville registered in the Registry Office for the Registry Division of Norfolk (No. 37) as Plan No. 226 and being more particularly described as follows, that is to say:

Premising the astronomic bearing of Lot 3, registered Plan 226, to govern the bearings herein;

COMMENCING at a point marking the most Northerly angle of said Lot Number Three and the most Westerly angle of Lot Number Four according to said Plan;

THENCE South Forty-four degrees and thirty-five minutes West along the North-westerly limit of said Lot Number Three, Thirty feet and Forty-seven one-hundredths of a foot to a point which is also the most Northerly angle of the lands described in Instrument registered in said Registry Office as Number 228067;

THENCE South Forty-seven degrees and Thirty-four minutes East being also along the North-easterly limit of the lands described in said Instrument Number 228067 Ninety-two feet and Seventy-five one-hundredths of a foot;

THENCE North Forty degrees and Twenty-two minutes East Fifty feet to a point in the North-easterly limit of said Lot Number Three and the South-westerly limit of Lot Number Five;

THENCE North Forty-seven degrees and Twenty-three minutes West Sixteen feet and Sixty-seven one-hundredths of a foot to a point in the South-easterly limit of Lot Number Four on said Plan;

THENCE South Forty-two degrees and Thirty-seven minutes West Twenty feet to the most Southerly angle of said Lot Number Four;

THENCE North Forty-seven degrees and Twenty-three minutes West along the South-westerly limit of said Lot Number Four, Seventy-three feet and Forty-six one-hundredths of a foot more or less to the point of commencement.

TOGETHER WITH the right-of-way for persons, animals and vehicles, in common with the Grantors in Instrument 286404, their heirs and assigns, over, along and upon the following strip of land:

COMMENCING at a point marking the most Easterly angle of Lot Number Three and

the most Southerly angle of Lot Number Six according to said Plan No. 226;

THENCE North Forty-seven degrees and Twenty-three minutes West along the South-westerly limit of Lots Numbered Six and Five on said Plan, One hundred feet;

THENCE South Forty degrees and Twenty-two minutes West Ten feet;

THENCE South Forty-seven degrees and Twenty-three minutes East, One hundred feet to a point in the South-easterly limit of said Lot Number Three;

THENCE North Forty degrees and Twenty-two minutes East along the South-easterly limit of said Lot Number Three, Ten feet more or less to the point of commencement.

TO HAVE AND TO HOLD unto the said Grantee, his heirs, executors, administrators and assigns or its successors and assigns, as the case may be, to and for their sole and only use forever.

SUBJECT NEVERTHELESS to the reservations, limitations, provisoes and conditions expressed in the original grant thereof from the Crown.

The said Grantor COVENANTS with the said Grantee that he has the right to convey the said lands to the said Grantee notwithstanding any act of the said Grantor.

AND that the said Grantee shall have quiet possession of the said lands free from all encumbrances.

AND the said Grantor COVENANTS with the said Grantee that he will execute such further assurances of the said lands as may be requisite.

AND the said Grantor COVENANTS with the said Grantee that he has done no act to encumber the said lands.

AND the said Grantor RELEASES to the said Grantee ALL his claims upon the said lands.

AND the said Spouse of the Grantor hereby consents to the transaction evidenced by this Indenture.

PROVIDED that in construing these presents the words "Grantor" and "Grantee" and the pronouns "he", "his" or "him" relating thereto and used therewith shall be read and construed as "Grantor" or "Grantors", "Grantee" or "Grantees", and "he", "she", "it" or "they", "his", "her", "its" or "their", or "him", "her", "it" or "them", respectively, as the number and gender of the party or parties referred to in each case require, and the number of the verb agreeing therewith shall be construed as agreeing with the said word or pronoun so substituted.

IN WITNESS WHEREOF the said parties hereto have hereunto set their hands and seals.

Signed, Sealed and Delivered
IN THE PRESENCE OF

Barbara Jane Partridge

Donald Faye Partridge

Land Gilbert, Limited

LAND TRANSFER TAX ACT

AFFIDAVIT OF RESIDENCE AND OF VALUE OF THE CONSIDERATION

IN THE MATTER OF THE CONVEYANCE OF (*insert brief description of land*) Part Lot 3, Plan 226, in the Township of Dalhi, in the Regional Municipality of Haldimand-Norfolk, formerly in the Township of Charlottevilla, in the County of Norfolk

BY (*print names of all transferors in full*) Barbara Jane Partridge

TO (*see instruction 1 and print names of all transferees in full*) John William Bedell and Violet Fern Bedell

I, (*see instruction 2 and print name(s) in full*) Violet Fern Bedell

MAKE OATH AND SAY THAT:

1. I am (*place a clear mark within the square opposite that one of the following paragraphs that describes the capacity of the deponent(s)*): (*see instruction 2*)
   - ☐ (a) A person in trust for whom the land conveyed in the above-described conveyance is being conveyed;
   - ☐ (b) A trustee named in the above-described conveyance to whom the land is being conveyed;
   - ☒ (c) A transferee named in the above-described conveyance;
   - ☐ (d) The authorized agent or solicitor acting in this transaction for ..... (insert name(s) of principal(s)) described in paragraph(s) (a), (b), (c) above; (*strike out references to inapplicable paragraphs*)
   - ☐ (e) The President, Vice-President, Manager, Secretary, Director, or Treasurer authorized to act for ..... (insert name(s) of corporation(s)) described in paragraph(s) (a), (b), (c) above; (*strike out references to inapplicable paragraphs*)
   - ☒ (f) A transferee described in paragraph (c) (*insert only one of paragraph (a), (b) or (c) above, as applicable*) and am making this affidavit on my own behalf and on behalf of John William Bedell (insert name of spouse) who is my spouse described in paragraph (c); (*insert only one of paragraph (a), (b) or (c) above, as applicable*)

   and as such, I have personal knowledge of the facts herein deposed to.
2. I have read and considered the definitions of "non-resident corporation" and "non-resident person" set out respectively in clauses 1(1)(f) and (g) of the Act. (*see instruction 3*)
3. The following persons to whom or in trust for whom the land conveyed in the above-described conveyance is being conveyed are non-resident persons within the meaning of the Act. (*see instruction 4*) None
4. THE TOTAL CONSIDERATION FOR THIS TRANSACTION IS ALLOCATED AS FOLLOWS:

(a) Monies paid or to be paid in cash	$ 9,000.00	
(b) Mortgages (i) Assumed (*show principal and interest to be credited against purchase price*)	$ nil	
(ii) Given back to vendor	$ nil	
(c) Property transferred in exchange (*detail below*)	$ nil	
(d) Securities transferred to the value of (*detail below*)	$ nil	
(e) Liens, legacies, annuities and maintenance charges to which transfer is subject	$ nil	
(f) Other valuable consideration subject to land transfer tax (*detail below*)	$ nil	
(g) VALUE OF LAND, BUILDING, FIXTURES AND GOODWILL SUBJECT TO LAND TRANSFER TAX (*total of (a) to (f)*)	$ 9,000.00	$ 9,000.00
(h) VALUE OF ALL CHATTELS — items of tangible personal property (*Retail Sales Tax is payable on the value of all chattels unless exempt under the provisions of the "Retail Sales Tax Act", R.S.O. 1980, c. 454, as amended*)		$ nil
(i) Other consideration for transaction not included in (g) or (h) above		$ nil
(j) TOTAL CONSIDERATION		$ 9,000.00

ALL BLANKS MUST BE FILLED IN. INSERT "NIL" WHERE APPLICABLE.

5. If consideration is nominal, describe relationship between transferor and transferee and state purpose of conveyance. (*see instruction 5*) N.A.
6. If the consideration is nominal, is the land subject to any encumbrance? No
7. Other remarks and explanations, if necessary N.A.

SWORN before me at the Town of Simcoe, in the Regional Municipality of Haldimand-Norfolk this 20th day of May 1983.

A Commissioner for taking Affidavits

Violet Fern Bedell (signature(s))

Violet Fern Bedell

PROPERTY INFORMATION RECORD

A. Describe nature of instrument

B. (i) Address of property being conveyed (*if available*) 9 Snook's Drive, Turkey Point, Ontario.

(ii) Assessment Roll # (*if available*)

C. Mailing address(es) for future Notices of Assessment under the Assessment Act for property being conveyed (*see instruction 6*) Mr. and Mrs. John William Bedell, 140 Lothian Avenue, Toronto, Ontario.

D. (i) Registration number for last conveyance of property being conveyed (*if available*) 317257

(ii) Legal description of property conveyed: Same as in D.(i) above. Yes ☒ No ☐ Not Known ☐

E. Name(s) and address(es) of each transferee's solicitor T. Fred Homeniuk, Messrs. Brimage, Tyrrell, Van Severen & Homeniuk, 21 Norfolk Street North, Simcoe, Ontario. N3Y 4L1.

For Land Registry Office use only
REGISTRATION NO.
LAND REGISTRY OFFICE NO.
REGISTRATION DATE

Revenue and Gilbert, Limited
Form 111, 115, 1161 or 1164

Page 2

AFFIDAVIT OF SUBSCRIBING WITNESS

I, Thomas Fred Homeniuk,

of the Town of Simcoe,

in the Regional Municipality of Haldimand-Norfolk, Solicitor,

make oath and say:

*See footnote I am a subscribing witness to the attached instrument and I was present and saw it executed at the Town of Simcoe by Barbara Jane Partridge and Donald Faye Partridge.

*See footnote I verily believe that each person whose signature I witnessed is the party of the same name referred to in the instrument.

SWORN before me at the Town of Simcoe, in the Regional Municipality of Haldimand-Norfolk

this 24th day of May 1983.

A COMMISSIONER FOR TAKING AFFIDAVITS, ETC.

Thomas Fred Homeniuk

* *Where a party is unable to read the instrument or where a party signs by making his mark or in foreign character add "after instrument had been read to him and he appeared fully to understand it". Where executed under a power of attorney insert "(name of attorney) as attorney for (name of party)": and for last clause substitute "I verily believe that the person whose signature I witnessed was authorized to execute the instrument as attorney for (name)".*

AFFIDAVIT AS TO AGE AND SPOUSAL STATUS

~~I~~ / WE Barbara Jane Partridge and Donald Faye Partridge, both

of the Township of Delhi,

in the Regional Municipality of Haldimand-Norfolk,

(severally) make oath and say: When ~~I~~ / WE executed the attached instrument,

* If attorney, see footnote

~~I WAS~~ / WE WERE EACH at least eighteen years old;

and within the meaning of section 1(f) of the Family Law Reform Act,

(a) ~~I WAS NOT A SPOUSE~~

Strike out inapplicable clauses.

(b) ~~WE WERE~~.

(c) We were the only spouses of one another. and there are no other spouses of the parties thereto.

** Not a matrimonial home, etc., see footnote.

We are not non-residents within the meaning of The Income Tax Act of Canada and did not hold the lands and premises beneficially for the use of any non-resident of Canada.

Resident of Canada, etc.

We are not retaining any interest whatsoever in any lands adjoining or abutting the lands described in the within instrument contrary to the provisions of The Planning Act, R.S.O. 1980 as amended.

(SEVERALLY) SWORN before me at the Town of Simcoe, in the Regional Municipality of Haldimand-Norfolk

this 24th day of May 1983

A COMMISSIONER FOR TAKING AFFIDAVITS, ETC.

Barbara Jane Partridge

Donald Faye Partridge

* *Note: Where affidavit made by an attorney substitute: "When I executed the attached instrument as attorney for (name), he/she was (spousal status, and if applicable, name of other spouse) within the meaning of section 1(f) of the Family Law Reform Act and when he/she executed the power of attorney, he/she had attained the age of majority".*

** *Note: See Section 42(3) (b) (c) and (d) of the Family Law Reform Act. If spouse does not join in or consent, either insert explanation or complete a separate affidavit.*

Ontario ServiceOntario

LAND
REGISTRY
OFFICE #37

PARCEL REGISTER (ABBREVIATED) FOR PROPERTY

50265-0295 (LT)

* CERTIFIED IN ACCORDANCE WITH THE LAND TITLES ACT * SUBJECT TO

PROPERTY DESCRIPTION: PT LT 3 PL 226 AS IN NR416434; T/W NR416434; NORFOLK COUNTY

PROPERTY REMARKS:

ESTATE/QUALIFIER:
FEE SIMPLE
LT CONVERSION QUALIFIED

RECENTLY:
FIRST CONVERSION FROM BOOK

OWNERS' NAMES
LAND, THOMAS

CAPACITY SHARE

REG. NUM.	DATE	INSTRUMENT TYPE	AMOUNT	PARTIES FROM
** PRINTOUT INCLUDES ALL DOCUMENT TYPES (DELETED INSTRUMENTS NOT INCLUDED) **				
**SUBJECT, ON FIRST REGISTRATION UNDER THE LAND TITLES ACT, TO:				
**	SUBSECTION 44(1) OF THE LAND TITLES ACT, EXCEPT PARAGRAPH 11, PARAGRAPH 14, PROVINCIAL SUCCESSION DUTIES			
**	AND ESCHEATS OR FORFEITURE TO THE CROWN.			
**	THE RIGHTS OF ANY PERSON WHO WOULD, BUT FOR THE LAND TITLES ACT, BE ENTITLED TO THE LAND OR ANY PART OF			
**	IT THROUGH LENGTH OF ADVERSE POSSESSION, PRESCRIPTION, MISDESCRIPTION OR BOUNDARIES SETTLED BY			
**	CONVENTION.			
**	ANY LEASE TO WHICH THE SUBSECTION 70(2) OF THE REGISTRY ACT APPLIES.			
**DATE OF CONVERSION TO LAND TITLES: 2007/06/25 **				
NR334281	1971/08/25	AGREEMENT		
NK141939	2021/06/04	TRANSFER	$235,000	BEDELL, CAROLYN JANE BENNETT, KAREN LYNN DEFIELDS, DEBRA JOAN
NK141940	2021/06/04	CHARGE	$152,750	LAND, THOMAS

NOTE: ADJOINING PROPERTIES SHOULD BE INVESTIGATED TO ASCERTAIN DESCRIPTIVE INCONSISTENCIES, IF ANY, WITH
NOTE: ENSURE THAT YOUR PRINTOUT STATES THE TOTAL NUMBER OF PAGES AND THAT YOU HAVE PICKED THEM ALL UP.

416434

'83 JUN -6 14 11

416434

No.
Registry Division of NORFOLK [No. 37]
I CERTIFY that this instrument is registered as of
2 11 P.M. JUN 6 1983 in the
Land Registry Office at Simcoe Ontario.

Land Registrar

FILMED	
ABSTRACT INDEX	3 P8.
CHECKED	

PROPERTY OF
NORFOLK REGISTRY
OFFICE NO. 37

REGISTRATION FEE	15.00
LAND TRANSFER TAX	36.00
RETAIL SALES TAX	

THIS SPACE TO BE RESERVED FOR CERTIFICATE OF REGISTRATION

Dated May 20th A.D. 19 83

BARBARA JANE PARTRIDGE;

—TO—

JOHN WILLIAM BEDELL, ET UX;
140 Lothian Avenue,
Toronto, Ontario.

Deed of Land

SITUATE

Township of Delhi

Newsome and Gilbert, Limited, — Form 100, 113, 1159 or 1162

ASSESSMENT ROLL NO.

ADDRESS OF PROPERTY
9 Snook's Drive,
Turkey Point, Ontario.

BRIMAGE, TYRRELL, VAN SEVEREN & HOMENIUK,
Barristers, etc.,
21 Norfolk Street North,
Simcoe, Ontario.
N3Y 4L1 JAB/cs

* Where a party is unable to read the instrument or where a party signs by making his mark or in foreign characters add "after instrument had been read to him and he appeared fully to understand it". Where executed under a power of attorney insert "(name of attorney) as attorney for (name of party)"; and for next clause substitute "I verily believe that the person whose signature I witnessed was authorized to execute the instrument as attorney for (name)".

and

OF THE SECOND PART

DONALD FAYE PARTRIDGE, of the Township of Delhi,
in the Regional Municipality of Haldimand-Norfolk

husband / ~~wife~~ of the said Grantor,
hereinafter called the "Spouse of the Grantor"
OF THE THIRD PART

Witnesseth that in consideration of ($9,000.00) NINE THOUSAND DOLLARS

now paid by the said Grantee to the said Grantor, the receipt whereof is hereby by him acknowledged, he the said Grantor DOTH GRANT unto the said Grantee in fee simple

THOSE lands and premises located in the following municipality, namely,

In the Township of Delhi, in the Regional Municipality of Haldimand-Norfolk and Province of Ontario

and being ~~composed of~~ more particularly described in Schedule "A" annexed hereto.

westerly limit of said Lot Number Three, Thirty feet and Forty-seven one-hundredths of a foot to a point which is also the most Northerly angle of the lands described in Instrument registered in said Registry Office as Number 228067;

THENCE South Forty-seven degrees and Thirty-four minutes East being also along the North-easterly limit of the lands described in said Instrument Number 228067 Ninety-two feet and Seventy-five one-hundredths of a foot;

THENCE North Forty degrees and Twenty-two minutes East Fifty feet to a point in the North-easterly limit of said Lot Number Three and the South-westerly limit of Lot Number Five;

THENCE North Forty-seven degrees and Twenty-three minutes West Sixteen feet and Sixty-seven one-hundredths of a foot to a point in the South-easterly limit of Lot Number Four on said Plan;

THENCE South Forty-two degrees and Thirty-seven minutes West Twenty feet to the most Southerly angle of said Lot Number Four;

THENCE North Forty-seven degrees and Twenty-three minutes West along the South-westerly limit of said Lot Number Four, Seventy-three feet and Forty-six one-hundredths of a foot more or less to the point of commencement.

TOGETHER WITH the right-of-way for persons, animals and vehicles, in common with the Grantors in Instrument 286404, their heirs and assigns, over, along and upon the following strip of land:

COMMENCING at a point marking the most Easterly angle of Lot Number Three and

AND the said Grantor RELEASES to the said Grantee ALL his claims upon the said lands.

AND the said Spouse of the Grantor hereby consents to the transaction evidenced by this Indenture.

PROVIDED that in construing these presents the words "Grantor" and "Grantee" and the pronouns "he", "his" or "him" relating thereto and used therewith shall be read and construed as "Grantor" or "Grantors", "Grantee" or "Grantees", and "he", "she", "it" or "they", "his", "her", "its" or "their", or "him", "her", "it" or "them", respectively, as the number and gender of the party or parties referred to in each case require, and the number of the verb agreeing therewith shall be construed as agreeing with the said word or pronoun so substituted.

IN WITNESS WHEREOF the said parties hereto have hereunto set their hands and seals.

Signed, Sealed and Delivered
IN THE PRESENCE OF

Barbara Jane Partridge

Donald Faye Partridge

4. THE TOTAL CONSIDERATION FOR THIS TRANSACTION IS ALLOCATED AS FOLLOWS:

(a) Monies paid or to be paid in cash	$ 9,000.00	
(b) Mortgages (i) Assumed (*show principal and interest to be credited against purchase price*)	$ nil	
(ii) Given back to vendor	$ nil	
(c) Property transferred in exchange (*detail below*)	$ nil	
(d) Securities transferred to the value of (*detail below*)	$ nil	
(e) Liens, legacies, annuities and maintenance charges to which transfer is subject	$ nil	
(f) Other valuable consideration subject to land transfer tax (*detail below*)	$ nil	
(g) VALUE OF LAND, BUILDING, FIXTURES AND GOODWILL SUBJECT TO LAND TRANSFER TAX (*total of (a) to (f)*)	$ 9,000.00	$ 9,000.00
(h) VALUE OF ALL CHATTELS — items of tangible personal property (*Retail Sales Tax is payable on the value of all chattels unless exempt under the provisions of the "Retail Sales Tax Act", R.S.O. 1980, c. 454, as amended*)		$ nil
(i) Other consideration for transaction not included in (g) or (h) above		$ nil
(j) TOTAL CONSIDERATION		$ 9,000.00

ALL BLANKS MUST BE FILLED IN. INSERT "NIL" WHERE APPLICABLE.

5. If consideration is nominal, describe relationship between transferor and transferee and state purpose of conveyance. (*see instruction 5*)
N.A.

6. If the consideration is nominal, is the land subject to any encumbrance? No

7. Other remarks and explanations, if necessary N.A.

SWORN before me at the Town of Simcoe,
in the Regional Municipality of Haldimand-Norfolk
this 20th day of May 1983.

A Commissioner for taking affidavits

Violet Fern Bedell
Violet Fern Bedell (signature(s))

PROPERTY INFORMATION RECORD

A. Describe nature of instrument

B. (i) Address of property being conveyed (*if available*)
9 Snook's Drive, Turkey Point, Ontario.

(ii) Assessment Roll # (*if available*)

C. Mailing address(es) for future Notices of Assessment under the Assessment Act for property being conveyed (*see instruction 6*)
Mr. and Mrs. John William Bedell, 140 Lothian Avenue, Toronto, Ontario.

D. (i) Registration number for last conveyance of property being conveyed (*if available*) 317257

(ii) Legal description of property conveyed: Same as in D.(i) above. Yes ☒ No ☐ Not Known ☐

E. Name(s) and address(es) of each transferee's solicitor T. Fred Homeniuk,
Messrs. Brimage, Tyrrell,
Van Severen & Homeniuk,
21 Norfolk Street North,
Simcoe, Ontario.
N3Y 4L1.

For Land Registry Office use only
REGISTRATION NO.
LAND REGISTRY OFFICE NO.
REGISTRATION DATE

A COMMISSIONER FOR TAKING AFFIDAVITS, ETC.

* *Where a party is unable to read the instrument or where a party signs by making his mark or in foreign character add "after instrument had been read to him and he appeared fully to understand it". Where executed under a power of attorney insert "(name of attorney) as attorney for (name of party)"; and for last clause substitute "I verily believe that the person whose signature I witnessed was authorized to execute the instrument as attorney for (name)".*

AFFIDAVIT AS TO AGE AND SPOUSAL STATUS

~~I~~ / WE Barbara Jane Partridge and Donald Faye Partridge, both

of the Township of Delhi,

in the Regional Municipality of Haldimand-Norfolk,

* If attorney, see footnote

(severally) make oath and say: When ~~I~~ / WE executed the attached instrument,

~~I WAS~~ / WE WERE EACH at least eighteen years old;

and within the meaning of section 1(f) of the Family Law Reform Act,

Strike out inapplicable clauses.

(a) ~~I WAS NOT A SPOUSE~~

(b) ~~WERE SPOUSES.~~

(c) We were the only spouses of one another. and there are no other spouses of the parties thereto.

** Not a matrimonial home, etc., see footnote.

We are not non-residents within the meaning of The Income Tax Act of Canada and did not hold the lands and premises beneficially for the use of any non-resident of Canada.

Resident of Canada, etc.

We are not retaining any interest whatsoever in any lands adjoining or abutting the lands described in the within instrument contrary to the provisions of The Planning Act, R.S.O. 1980 as amended.

(SEVERALLY) SWORN before me at the Town of Simcoe, in the Regional Municipality of Haldimand-Norfolk

this 24th day of May 19 83

Barbara Jane Partridge

Donald Faye Partridge

A COMMISSIONER FOR TAKING AFFIDAVITS, ETC.

* *Note: Where affidavit made by an attorney substitute: "When I executed the attached instrument as attorney for (name), he/she was (spousal status, and if applicable, name of other spouse) within the meaning of section 1(f) of the Family Law Reform Act and when he/she executed the power of attorney, he/she had attained the age of majority".*

** *Note: See Section 12(2) (b) (c) and (d) of the Family Law Reform Act. If spouse does not join in or consent, either insert explanation or complete a separate affidavit.*

Ontario ServiceOntario

LAND
REGISTRY
OFFICE #37

PARCEL REGISTER (ABBREVIATED) FOR PROPERTY

50265-0291 (LT)

* CERTIFIED IN ACCORDANCE WITH THE LAND TITLES ACT * SUBJECT TO

PROPERTY DESCRIPTION: PT LT 3 PL 226 AS IN NR334283; S/T NR334283; NORFOLK COUNTY

NEIGHBOUR 3

PROPERTY REMARKS:

ESTATE/QUALIFIER:
FEE SIMPLE
LT CONVERSION QUALIFIED

RECENTLY:
FIRST CONVERSION FROM BOOK

OWNERS' NAMES	CAPACITY	SHARE
BENNETT, KAREN LYNN	TCOM	AS TO AN UND
DEFIELDS, DEBRA JOAN	TCOM	AS TO AN UND
BEDELL, CAROLYN JANE	TCOM	AS TO AN UND
BEDELL, VIOLET FERN - ESTATE		
BENNETT, KAREN LYNN	TWW	
DEFIELDS, DEBRA JOAN	TWW	
BEDELL, CAROLYN JANE	TWW	
BENNETT, KAREN LYNN	JTEN	
BENNETT, ROBERT RENE	JTEN	

REG. NUM.	DATE	INSTRUMENT TYPE	AMOUNT	PARTIES FROM
** PRINTOUT INCLUDES ALL DOCUMENT TYPES (DELETED INSTRUMENTS NOT INCLUDED) **				
**SUBJECT, ON FIRST REGISTRATION UNDER THE LAND TITLES ACT, TO:				
**	SUBSECTION 44(1) OF THE LAND TITLES ACT, EXCEPT PARAGRAPH 11, PARAGRAPH 14, PROVINCIAL SUCCESSION DUTIES *			
**	AND ESCHEATS OR FORFEITURE TO THE CROWN.			
**	THE RIGHTS OF ANY PERSON WHO WOULD, BUT FOR THE LAND TITLES ACT, BE ENTITLED TO THE LAND OR ANY PART OF			
**	IT THROUGH LENGTH OF ADVERSE POSSESSION, PRESCRIPTION, MISDESCRIPTION OR BOUNDARIES SETTLED BY			
**	CONVENTION.			
**	ANY LEASE TO WHICH THE SUBSECTION 70(2) OF THE REGISTRY ACT APPLIES.			
**DATE OF CONVERSION TO LAND TITLES: 2007/06/25 **				
NR334281	1971/08/25	AGREEMENT		
NK135607	2020/11/24	TRANS PERSONAL REP	$315,000	BENNETT, KAREN LYNN DEFIELDS, DEBRA JOAN BEDELL, CAROLYN JANE BENNETT, KAREN LYNN DEFIELDS, DEBRA JOAN BEDELL, CAROLYN JANE

NOTE: ADJOINING PROPERTIES SHOULD BE INVESTIGATED TO ASCERTAIN DESCRIPTIVE INCONSISTENCIES, IF ANY, WITH
NOTE: ENSURE THAT YOUR PRINTOUT STATES THE TOTAL NUMBER OF PAGES AND THAT YOU HAVE PICKED THEM ALL UP.

334283

Dated APRIL 27TH, 1971.

HATTIE ISABELLE PARTRIDGE

—TO—

VIOLET FERN BEDELL

Address: 140 Lothian Avenue,
Toronto 18, Ontario.

Deed of Land

SITUATE

part of Lot 3, Plan 226,
Township of Charlotteville.

United Stationery Co. Limited, Toronto

SWORN before me at the
in the
of
this
A.D. 19
day of
A Commissioner for taking Affidavits, etc.

334283

No.
Registry Division of Norfolk (No. 37)
I certify that this instrument is registered as of
2¹² p.M.
AUG 25 1971 in the
Registry Office
at Simcoe,
Ontario.
for Charlotteville
REGISTRAR

THIS SPACE TO BE RESERVED FOR REGISTRY OFFICE CERTIFICATES

3 P8

S.E pt 50'x100'
subj to 10' rt of way on E
Lot 3 Plan 226

PROPERTY OF THE
REGISTRY OFFICE

REID & REID
BARRISTERS & SOLICITORS
34 PEEL STREET
SIMCOE, ONTARIO

Partridge became the owners of the hereinafter described lands as Joint Tenants;

AND WHEREAS the said William Francis Partridge died on or about the 11th day of January, 1971;

AND WHEREAS Consent to the transfer of property Number B-2307372 issued by the Department of National Revenue under the Estate Tax Act to the Estate of William Francis Partridge covering the hereinafter described lands was registerec in the Norfolk Registry Office as Number 331697;

AND WHEREAS Certificate for Registration Number 547038 issued by the Minister of Revenue for Ontario to the Estate of William Francis Partridge covering the hereinafter described lan was registered in the Norfolk Registry Office as Number 331698.

WITNESSETH that in consideration of other good and valuable consideration and the sum of - - - TWO - - - ($2.00) - - - DOLLA of lawful money of Canada, now paid by the said Grantee to the said Grantor, the receipt whereof is hereby by her acknowledged, she the said Grantor DOTH GRANT unto said Grantee in fee simple.

limit of the lands described in said Instrument Number 226067, 100 feet to a point which said point is the South-west angle of the lands described in a Deed registered in said Registry Office as Number 286404;

THENCE North 40 degrees and 22 minutes East along the Southerly limit of the lands described in said Instrument Number 286404 a distance of 50 feet to a point in the North-easterly limit of said Lot Number Three and the South-westerly limit of Lot Number Five, Plan Number 226, which said point is also the South-east angle of the lands described in said Instrument Number 286404;

THENCE South 47 degrees and 23 minutes East along the Westerly limits of Lots Number Five and Six in said Plan Number 226 and th North-easterly limit of said Lot Number Three a distance of 100 f more or less to the point of commencement.

SUBJECT TO a right-of=way for persons, animals and vehicles in common with the Grantees in said registered Instrument Number 286404 their heirs and assigns over and upon the following strip of land.

COMMENCING at a point marking the most Easterly angle of said Lot Number Three and the most Southerly angle of said Lot Number Six, both according to said Plan Number 226 (hereinbefore calle the South-east angle of said Lot Number Three);

And that the said Grantee shall have quiet p-

from all incumbrances.

And the said Grantor Covenants with the said Grantee that she will execute such further assurances of the said lands as may be requisite.

And the said Grantor Covenants with the said Grantee that she has done no act to incumber the said lands.

And the said Grantor Releases to the said Grantee All her claims upon the said lands.

In Witness Whereof the said parties hereto have hereunto their hands and seals.

Signed, Sealed and Delivered
IN THE PRESENCE OF

Franklin Reid

Hattie J. Partridge

this 11th day of June
19 71.

A Commissioner for taking Affidavits, etc.

NOTE: If Attorney, substitute in space provided "I am Attorney for.....(State name)..... one of the parties named therein and he/she was of the full age of twenty-one years"

AFFIDAVIT UNDER LANDS TRANSFER TAX ACT

In the Matter of The Land Transfer Tax Act

Province of Ontario
COUNTY of NORFOLK
To Wit:

I, HATTIE ISABELLE PARTRIDGE, of the Town of Simcoe in the County of Norfolk make oath and say:

This affidavit may be made by the purchaser or vendor or by any one acting for them under power of attorney or by an agent accredited in writing by the purchaser or vendor or by the solicitor of either of them.

1. I am the Grantor. named in the within (or annexed) transfer.

2. I have a personal knowledge of the facts stated in this affidavit.

3. The true amount of the monies in cash and the value of any property or security included in the consideration is as follows:

(a) Monies paid in cash Gift -	$2,000.00
(b) Property transferred in exchange: Equity value $	$ nil
Encumbrances	$ nil
(c) Securities transferred to the value of	$ nil
(d) *Balances of existing encumbrances with interest owing at date of transfer*	$ nil
(e) Monies secured by mortgage under this transaction	$2,000.00
(f) Liens, annuities and maintenance charges to which transfer is subject	$ nil
Total consideration	$4,000.00

Clause 4, 5 and 6 should be struck out if not applicable or necessary.

~~4. If consideration is nominal, is the transfer for natural love and affection?~~

~~5. If so, what is the relationship between Grantor and Grantee?~~

6. Other remarks and explanations, if necessary

$2,000.00 gift for 1971
Tax only on $2,000.00

SWORN before me at the Town of Simcoe in the County of Norfolk this 11th day of June 1971.

Hattie I. Partridge

A Commissioner for taking Affidavits, etc.

Ontario ServiceOntario

LAND
REGISTRY
OFFICE #37

PARCEL REGISTER (ABBREVIATED) FOR PROPERTY

50265-0291 (LT)

* CERTIFIED IN ACCORDANCE WITH THE LAND TITLES ACT * SUBJECT TO

PROPERTY DESCRIPTION: PT LT 3 PL 226 AS IN NR334283; S/T NR334283; NORFOLK COUNTY

NEIGHBOUR 3

PROPERTY REMARKS:

ESTATE/QUALIFIER:
FEE SIMPLE
LT CONVERSION QUALIFIED

RECENTLY:
FIRST CONVERSION FROM BOOK

OWNERS' NAMES	CAPACITY	SHARE
BENNETT, KAREN LYNN	TCOM	AS TO AN UND
DEFIELDS, DEBRA JOAN	TCOM	AS TO AN UND
BEDELL, CAROLYN JANE	TCOM	AS TO AN UND
BEDELL, VIOLET FERN - ESTATE		
BENNETT, KAREN LYNN	TWW	
DEFIELDS, DEBRA JOAN	TWW	
BEDELL, CAROLYN JANE	TWW	
BENNETT, KAREN LYNN	JTEN	
BENNETT, ROBERT RENE	JTEN	

REG. NUM.	DATE	INSTRUMENT TYPE	AMOUNT	PARTIES FROM
** PRINTOUT INCLUDES ALL DOCUMENT TYPES (DELETED INSTRUMENTS NOT INCLUDED) **				
**SUBJECT, ON FIRST REGISTRATION UNDER THE LAND TITLES ACT, TO:				
**	SUBSECTION 44(1) OF THE LAND TITLES ACT, EXCEPT PARAGRAPH 11, PARAGRAPH 14, PROVINCIAL SUCCESSION DUTIES *			
**	AND ESCHEATS OR FORFEITURE TO THE CROWN.			
**	THE RIGHTS OF ANY PERSON WHO WOULD, BUT FOR THE LAND TITLES ACT, BE ENTITLED TO THE LAND OR ANY PART OF			
**	IT THROUGH LENGTH OF ADVERSE POSSESSION, PRESCRIPTION, MISDESCRIPTION OR BOUNDARIES SETTLED BY			
**	CONVENTION.			
**	ANY LEASE TO WHICH THE SUBSECTION 70(2) OF THE REGISTRY ACT APPLIES.			
**DATE OF CONVERSION TO LAND TITLES: 2007/06/25 **				
NR334281	1971/08/25	AGREEMENT		
NK135607	2020/11/24	TRANS PERSONAL REP	$315,000	BENNETT, KAREN LYNN DEFIELDS, DEBRA JOAN BEDELL, CAROLYN JANE BENNETT, KAREN LYNN DEFIELDS, DEBRA JOAN BEDELL, CAROLYN JANE

NOTE: ADJOINING PROPERTIES SHOULD BE INVESTIGATED TO ASCERTAIN DESCRIPTIVE INCONSISTENCIES, IF ANY, WITH
NOTE: ENSURE THAT YOUR PRINTOUT STATES THE TOTAL NUMBER OF PAGES AND THAT YOU HAVE PICKED THEM ALL UP.

334283

Dated APRIL 27TH, 1971.

HATTIE ISABELLE PARTRIDGE

—TO—

VIOLET FERN BEDELL

Address: 140 Lothian Avenue,
Toronto 18, Ontario.

Deed of Land

SITUATE

part of Lot 3, Plan 226,
Township of Charlotteville.

United Stationery Co. Limited, Toronto

SWORN before me at the
in the
of
this
A.D. 19
day of
A Commissioner for taking Affidavits, etc.

334283

No.
Registry Division of Norfolk (No. 37)
I certify that this instrument is registered as of
2¹² p.M.
AUG 25 1971 in the
Registry Office
at Simcoe,
Ontario.
for Charlotteville
REGISTRAR

THIS SPACE TO BE RESERVED FOR REGISTRY OFFICE CERTIFICATES

3 P8

S.E pt 50'x100'
subj to 10' rt of way on E
Lot 3 Plan 226

PROPERTY OF THE
REGISTRY OFFICE

REID & REID
BARRISTERS & SOLICITORS
34 PEEL STREET
SIMCOE, ONTARIO

Partridge became the owners of the hereinafter described lands as Joint Tenants;

AND WHEREAS the said William Francis Partridge died on or about the 11th day of January, 1971;

AND WHEREAS Consent to the transfer of property Number B-2307372 issued by the Department of National Revenue under the Estate Tax Act to the Estate of William Francis Partridge covering the hereinafter described lands was registerec in the Norfolk Registry Office as Number 331697;

AND WHEREAS Certificate for Registration Number 547038 issued by the Minister of Revenue for Ontario to the Estate of William Francis Partridge covering the hereinafter described lan was registered in the Norfolk Registry Office as Number 331698.

WITNESSETH that in consideration of other good and valuable consideration and the sum of - - - TWO - - - ($2.00) - - - DOLLA of lawful money of Canada, now paid by the said Grantee to the said Grantor, the receipt whereof is hereby by her acknowledged, she the said Grantor DOTH GRANT unto said Grantee in fee simple.

limit of the lands described in said Instrument Number 226067, 100 feet to a point which said point is the South-west angle of the lands described in a Deed registered in said Registry Office as Number 286404;

THENCE North 40 degrees and 22 minutes East along the Southerly limit of the lands described in said Instrument Number 286404 a distance of 50 feet to a point in the North-easterly limit of said Lot Number Three and the South-westerly limit of Lot Number Five, Plan Number 226, which said point is also the South-east angle of the lands described in said Instrument Number 286404;

THENCE South 47 degrees and 23 minutes East along the Westerly limits of Lots Number Five and Six in said Plan Number 226 and th North-easterly limit of said Lot Number Three a distance of 100 f more or less to the point of commencement.

SUBJECT TO a right-of=way for persons, animals and vehicles in common with the Grantees in said registered Instrument Number 286404 their heirs and assigns over and upon the following strip of land.

COMMENCING at a point marking the most Easterly angle of said Lot Number Three and the most Southerly angle of said Lot Number Six, both according to said Plan Number 226 (hereinbefore calle the South-east angle of said Lot Number Three);

And that the said Grantee shall have quiet p-

from all incumbrances.

And the said Grantor Covenants with the said Grantee that she will execute such further assurances of the said lands as may be requisite.

And the said Grantor Covenants with the said Grantee that she has done no act to incumber the said lands.

And the said Grantor Releases to the said Grantee All her claims upon the said lands.

In Witness Whereof the said parties hereto have hereunto their hands and seals.

Signed, Sealed and Delivered
IN THE PRESENCE OF

Franklin Reid

Hattie J. Partridge

this 11th day of June
19 71.

A Commissioner for taking Affidavits, etc.

NOTE: If Attorney, substitute in space provided "I am Attorney for.....(State name)..... one of the parties named therein and he/she was of the full age of twenty-one years"

AFFIDAVIT UNDER LANDS TRANSFER TAX ACT

In the Matter of The Land Transfer Tax Act

Province of Ontario
COUNTY of NORFOLK
To Wit:

I, HATTIE ISABELLE PARTRIDGE, of the Town of Simcoe in the County of Norfolk make oath and say:

This affidavit may be made by the purchaser or vendor or by any one acting for them under power of attorney or by an agent accredited in writing by the purchaser or vendor or by the solicitor of either of them.

1. I am the Grantor. named in the within (or annexed) transfer.

2. I have a personal knowledge of the facts stated in this affidavit.

3. The true amount of the monies in cash and the value of any property or security included in the consideration is as follows:

(a) Monies paid in cash Gift -	$2,000.00
(b) Property transferred in exchange: Equity value $	$ nil
Encumbrances	$ nil
(c) Securities transferred to the value of	$ nil
(d) *Balances of existing encumbrances with interest owing at date of transfer*	$ nil
(e) Monies secured by mortgage under this transaction	$2,000.00
(f) Liens, annuities and maintenance charges to which transfer is subject	$ nil
Total consideration	$4,000.00

Clause 4, 5 and 6 should be struck out if not applicable or necessary.

~~4. If consideration is nominal, is the transfer for natural love and affection?~~

~~5. If so, what is the relationship between Grantor and Grantee?~~

6. Other remarks and explanations, if necessary

$2,000.00 gift for 1971
Tax only on $2,000.00

SWORN before me at the Town of Simcoe in the County of Norfolk this 11th day of June 1971.

Hattie I. Partridge

A Commissioner for taking Affidavits, etc.

MAP A

ANPL2023245

CONTEXT MAP

Geographic Township of CHARLOTTEVILLE

8/9/2023

Legend

Subject Lands

2020 Air Photo

N

20 10 0 20 40 60 80 Meters

MAP B

ANPL2023245

ZONING BY-LAW MAP

Geographic Township of CHARLOTTEVILLE

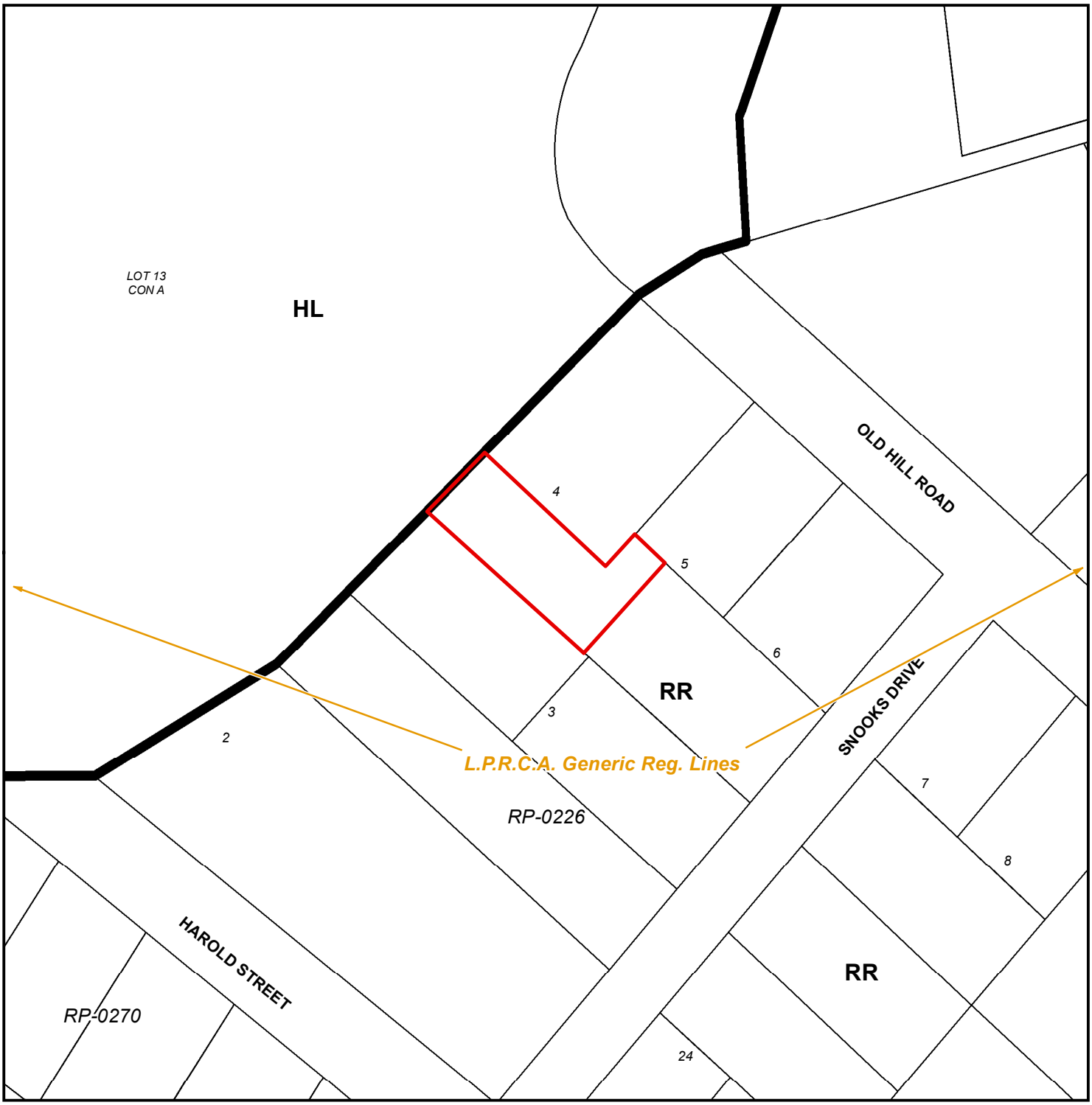

ZONING BY-LAW 1-Z-2014

8/9/2023

LEGEND

- Subject Lands
- LPRCA Generic RegLines

(H) - Holding

HL - Hazard Land Zone

RR - Resort Residential Zone

N

6 3 0 6 12 18 24 Meters

MAP C

ANPL2023245

CONCEPTUAL PLAN

Geographic Township of CHARLOTTEVILLE

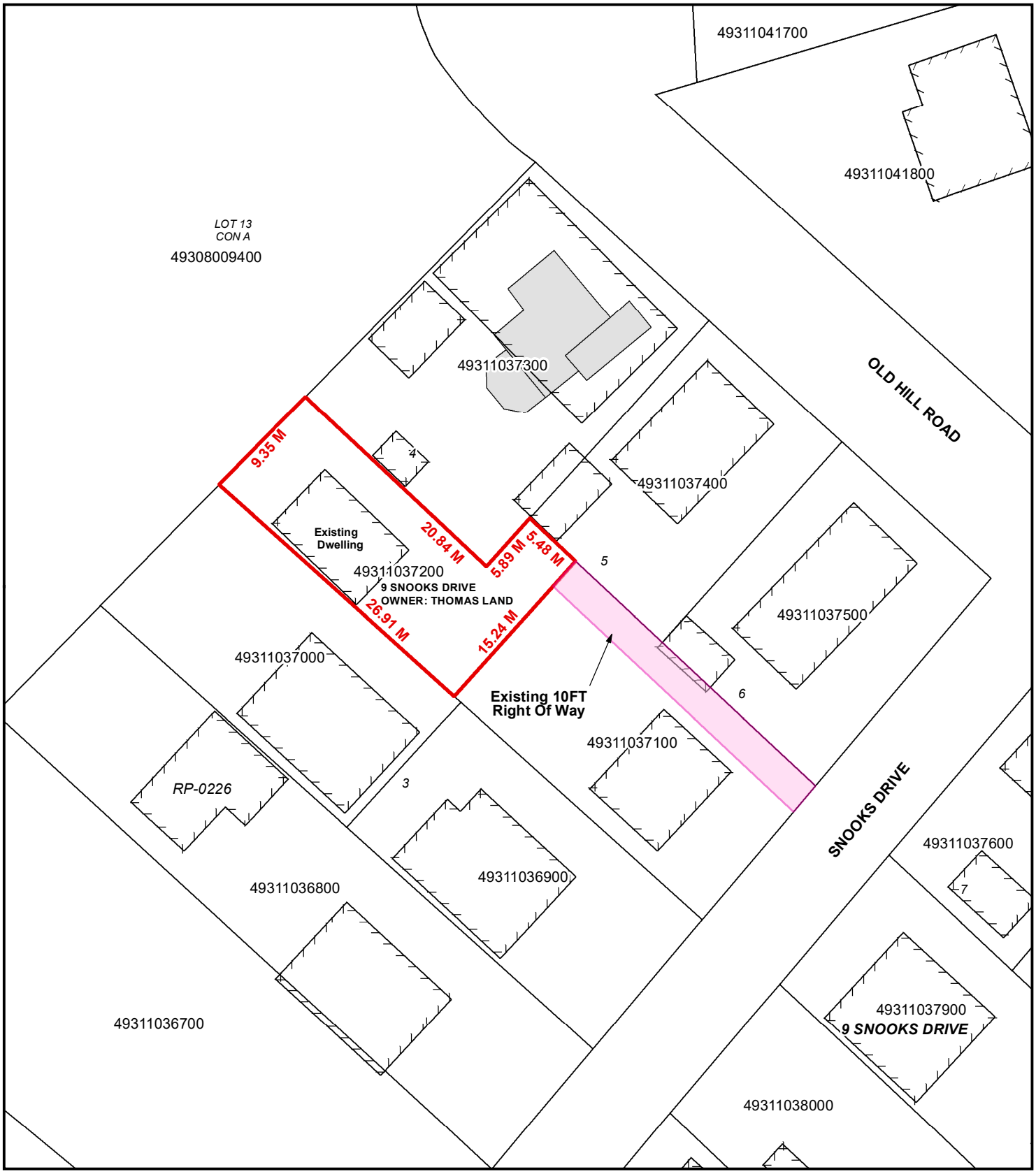

Legend

Subject Lands

Easements

8/9/2023

N

4 2 0 4 8 12 16 Meters

LOCATION OF LANDS AFFECTED

ANPL2023245

CONCEPTUAL PLAN

Geographic Township of CHARLOTTEVILLE

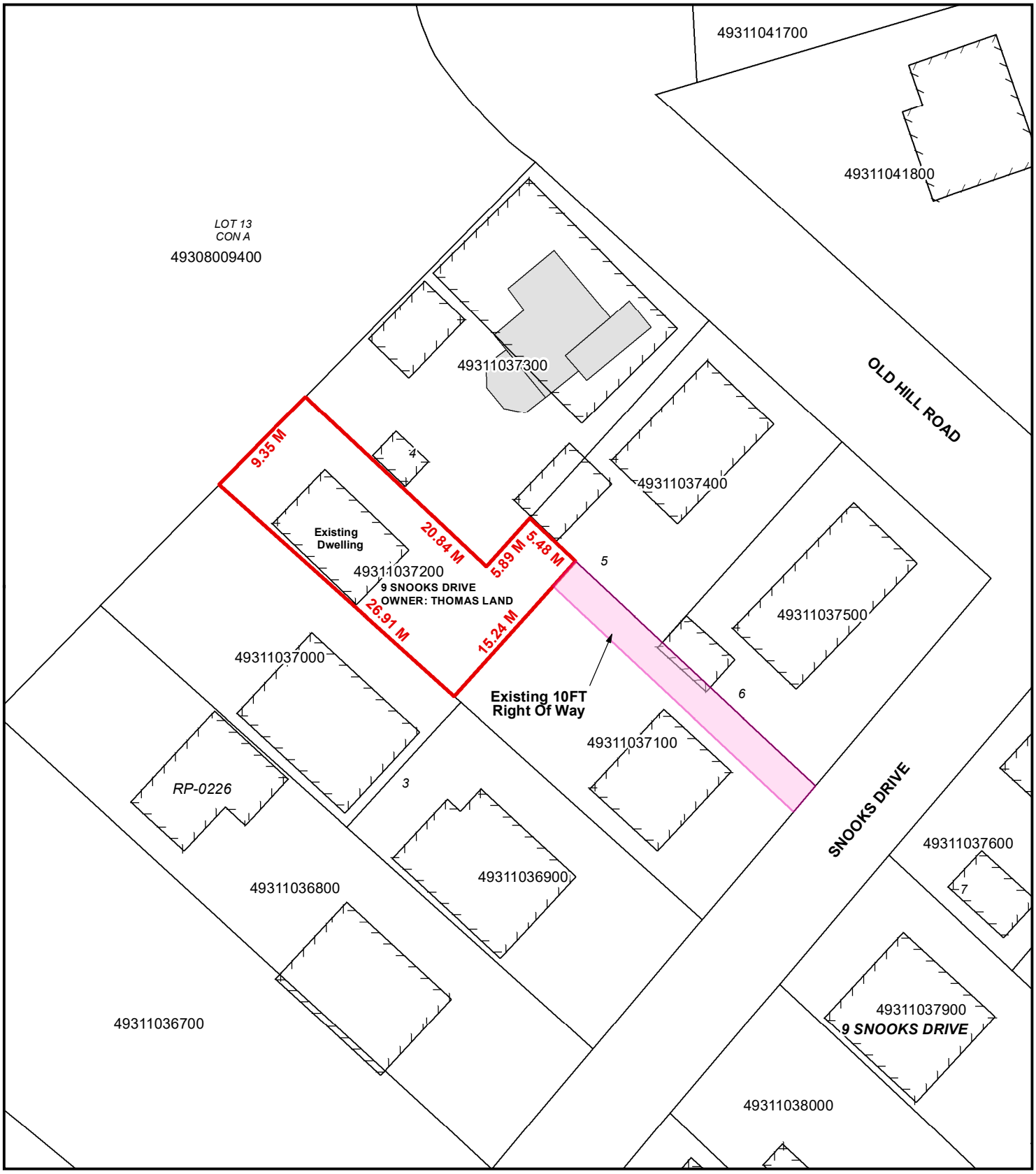

Legend

- Subject Lands
- Easements

8/9/2023

N

4 2 0 4 8 12 16 Meters